RM SOVICH ARCHITECTURE

The Waldorf School of Baltimore

PROJECT MANUAL



Interior Renovations for
The Waldorf School of Baltimore
10/19/2026

LOCATION:
4801 Tamarind Rd, Baltimore, MD 21209

PROJECT DIRECTORY

PROJECT:

Interior Renovations for the Waldorf School of Baltimore
4801 Tamarind Rd, Baltimore, MD 21209

OWNER:

The Waldorf School of Baltimore
4801 Tamarind Rd, Baltimore, MD 21209

CONSTRUCTION MANAGER:

FINNEY | LYNN, LLC. Hereafter (F\L LLC)
Development / Construction Management
John R. Lynn, Principal | Jack Finney, Principal
Cell 301.219.9118
21516 Ripplemead Drive, Laytonsville, Maryland 20882
john@finneylynnllc.com;

TYPE OF WORK:

Invites sealed Bids for interior renovations.

ARCHITECT:

In accordance with bidding documents prepared by:
RM Sovich Architecture
1 Village Square Suite 175
Baltimore, MD 21210

MEP ENGINEER:

KBD Engineering Company
Phone: 410-592-9003
Fax: 410-592-8858
Cell: 443-386-3729

TABLE OF CONTENTS

Released for Construction 10/19/2026

DIVISION 1 -GENERAL REQUIREMENTS	ISSUE DATE	REVISION DATE
01 001 TABLE OF CONTENTS	9/22/2026	
01 050 LIST OF DRAWINGS	9/22/2026	
01 090 DEFINITIONS	9/22/2026	
01 110 SUMMARY	9/22/2026	
01 200 PRICE AND PAYMENT PROCEDURES	9/22/2026	
01 300 ADMINISTRATIVE REQUIREMENTS	9/22/2026	
01 400 QUALITY REQUIREMENTS	9/22/2026	
01 420 REFERENCES	9/22/2026	
01 500 TEMPORARY FACILITIES AND CONTROLS	9/22/2026	
01 600 PRODUCT REQUIREMENTS	9/22/2026	
01 701 EXECUTION & CLOSEOUT REQUIREMENTS	9/22/2026	
01 732 SELECTIVE DEMOLITION	9/22/2026	
DIVISION 2 - SITE CONSTRUCTION	N/A	
DIVISION 3 – CONCRETE	N/A	
DIVISION 4 – MASONRY	N/A	
DIVISION 5 - METALS	N/A	
DIVISION 6 - WOOD AND PLASTICS	9/22/2026	
DIVISION 7 - THERMAL AND MOISTURE PROTECTION		
07 210 THERMAL INSULATION	9/22/202	
DIVISION 8 - DOORS AND WINDOW		
08 211 FLUSH WOOD DOORS	9/22/2026	
08 212 STILE AND RAIL DOORS	9/22/2026	
08 710 DOOR HARDWARE	9/22/2026	
DIVISION 9 – FINISHES		
09260 GYPSUM ASSEMBLIES	9/22/2026	
09 310 CORK FLOOR	9/22/2026	
09 500 ACOUSTICAL CEILINGS	9/22/2026	
09 651 RESILIENT TILE FLOORING	9/22/2026	
09 500 ACOUSTICAL CEILINGS	9/22/2026	
09 910 PAINT	9/22/2026	

TABLE OF CONTENTS

Released for Construction 10/19/2026

DIVISION 10 – SPECIALTIES
10 11 13 CUSTOM MAGNETIC CHALKBOARDS 10/19/2026

DIVISION 11 – EQUIPMENT
11 131 PROJECTION SCREEN 10/19/2026

DIVISION 12 – FURNISHINGS
12 356 CASEWORK AND SOLID SURFACE 10/19/2026
12 200 WINDOW TREATMENTS 10/19/2026
12 241 ROLLER WINDOW SHADES 10/19/2026

DIVISION 21 – FIRE PROTECTION
21 000 GENERAL FIRE PROTECTION ON MEP DRAWINGS
21 050 FIRE PROTECTION ON MEP DRAWINGS

DIVISION 22 –PLUMBING ON MEP DRAWINGS
22 000 GENERAL PLUMBING
22 050 PLUMBING

DIVISION 23 –HVAC ON MEP DRAWINGS
23 000 GENERAL HVAC
23 050 HVAC

DIVISION 26 –ELECTRICAL ON MEP DRAWINGS
26 000 GENERAL ELECTRICAL
26 050 BASIC ELECTRICAL MATERIALS
26 200 ELECTRICAL DISTRIBUTION
26 500 LIGHTING

SECTION 01 090 DEFINITIONS

1.0 OWNER:

A. Where the term Owner is used in the Project Manual, it refers to:
The Waldorf School of Baltimore
4801 Tamarind Rd, Baltimore, MD 21209

1.1 CONSTRUCTION MANAGER

A. Refers to FINNEY | LYNN, LLC. Hereafter (FL LLC)
21516 Ripplemead Drive, Laytonsville, Maryland 20882

who by contract with the Owner, is authorized to provide project management for construction of this project and provide as described in the Contract Documents.

1.2 ARCHITECT:

A. For architectural work, refers to
RM Sovich Architecture, Inc.
1 Village Square, Suite 175
Baltimore, Maryland, 21210

who by contract with the Owner, is authorized to prepare Contract Documents for construction of this project and provide professional services as described in the Contract Documents.

1.3 PROVIDE

A. Where the term "provide" is used, it shall be understood to mean "Furnish and install".

1.4 PROJECT MANUAL

A. The term "Project Manual" describes the written document, of one or more volumes, which includes the Contractual Legal Documents, Sample Forms and Technical Specifications and Technical Specifications on drawings.

1.5 PRODUCT

A. The term "product" shall be deemed to mean all natural and manufactured materials, fixtures, equipment, devices, and furnishings to be incorporated into the Work.

1.6 LANGUAGE OF PROJECT MANUAL

A. The language of the Project manual is of the abbreviated or streamline type and includes incomplete sentences. Omission of words or phrases such as “the Contractor shall”, “in conformity therewith”, “shall be”, “as noted on the Drawings”, “according to the Plans”, “A”, “an”, “the”, and “all” are intentional.

B. Omitted words or phrases shall be supplied by inference in the same manner as they are when a “note” occurs on the Drawings, the words “shall be” or “shall”, will, be supplied by inference.

END OF SECTION 01 090

SECTION 01 110 - SUMMARY

PART 1 - GENERAL

1.1 SUMMARY OF WORK

1.2 Project Identification: As follows:
1.3 Location: 4801 Tamarind Rd, Baltimore, MD 21209

1.4 Owner: The Waldorf School of Baltimore
4801 Tamarind Rd, Baltimore, MD 21209
1.5 Construction Manager: Finney | Lynn LLC
21516 Ripplemead Drive, Laytonsville, Maryland 20882

1.6 Contract Documents, dated 9/22/2026 were prepared by
RM Sovich Architecture, 1 Village Square, Suite 175 Baltimore, MD 21210

1.7x The Work consists of interior renovations to areas on two different levels: a classroom conversion into to Science Classroom, unfinished space into a Library, and enclosure of an area on a lower level to be used as Theater Storage. Work includes, but is not limited to: selective demolition, exterior insulation, new aluminum clad wood windows, interior framing, wood doors, hardware, and new finishes, hvac, plumbing, lighting, and equipment, as described in the Contract Documents.

1.7 WORK RESTRICTIONS

1.8 Contractor's Use of Premises: During construction, Contractor shall have limited use of site area indicated. Contractor must keep in mind the construction is in close proximity to an operating school. Maintaining safe and efficient operation of the school is important.

a. At all times the sidewalk in front of the school's property along Tamarind Road is to be kept free of construction vehicles to allow the safe delivery and pick-up of children by their parents.
b. The plaza in front of the school must be kept open to school pedestrian traffic at all times. Any temporary blockages must be coordinated with the schools' executive director. The Contractor shall be responsible for any damage to the concrete pavement, trees, and shrubs.
c. No construction equipment will be permitted on the concrete garage deck without specific written permission from a structural engineer.

d. Access to the rear the property, via the school's access road must be coordinated with the school's executive director. The Contractor will be allowed a maximum of three parking spaces on the rear parking lot—these will be identified prior to construction. No storage of equipment or storage trailers are permitted in this area.
e. The Contractor shall have not access to the school's parking garage for parking of vehicles.
f. The grass on the north side of the school's garage is owned by School up to the wrought iron fence. This area is available for construction access during construction. The area is maintained by Shelter Properties and must be restored the present condition at the completion of construction.
g. Contract vehicles may not park in the private lot directly across from the school. The lot is property of the Community Association. Contractor personal vehicles may park where parking is permitted on Yellowwood Avenue or Spring Garden Road.
h. The school and school grounds are a 'smoke-free' environment. Smoking is not permitted on the school grounds or in the building. (Smoking areas will be established by the school's executive director.)
i. No contractor or subcontractor shall enter the building without registering with the receptionist and receiving a badge. Workers must wear badges at all times they are in the building.
j. Contractor will review site safety procedures at progress meetings during construction.
k. Contractor will be responsible to see that the reinforcing bars in the existing concrete plank are not cut nor damaged during construction.
l. Contractor is to coordinate scheduling of any loud noise-making activities, such as concrete cutting and core drilling of the slab, with the school's classroom schedules

PART 2 - PRODUCTS (Not Applicable)

PART 3 - EXECUTION (Not Applicable)

END OF SECTION 01110

SECTION 01 200 PRICE AND PAYMENT PROCEDURES

PART 1 - GENERAL

1.1 ALLOWANCES

A. The following Allowances are included in the Contract Sum: N/A

B. Advise the Architect of the date when selection and purchase of each product or system described by an Allowance must be completed to avoid delaying the Work.

C. Submit invoices to show cost of products furnished under each allowance. Reconciliation of Allowance amounts with actual costs will be by Change Order.

1.2 ALTERNATES

A. An alternate is an amount proposed by bidders and stated on the Bid Form for certain work that may be added to or deducted from the Base Bid amount if the Owner accepts a change in either the amount of construction to be completed or in the products, materials, equipment, systems, or installation methods described in the Contract Documents.
   a. The cost or credit for each alternate is the net addition to or deduction from the Contract Sum to incorporate the alternate into the Work. No other adjustments are made to the Contract Sum.

   b. ALTERNATE PRICE #1 (DEDUCT), Item #b.1 To use a Standard Color of "HUSH" Acoustics in lieu of "Buttercup" in the LUXE Series.
   c. ALTERNATE PRICE #2: ADD To provide Demonstration Table as manufactured by Diversified Casework with Solid Epoxy Countertop- No sink required. "Instructor Demonstratin Desk 1116: 96"W x 30"D x 36"D.

1.3 CONTRACT MODIFICATION PROCEDURES

A. Upon the Owner's approval of a proposal from the Contractor, submitted either in response to a Proposal Request issued by the Architect or as a request for change from the Contractor, the Architect will issue a Change Order on AIA Document G701, for all changes to the Contract Sum or Contract Time.

B. When the Owner and Contractor disagree on the terms of a proposal, the Architect may

issue a Construction Change Directive on AIA Document G714, instructing the Contractor to proceed with the change. The Construction Change Directive will contain a description of the change, and designate the method to be followed to determine changes to the Contract Sum or Contract Time.

1.4 UNIT PRICES

A. The following Unit Prices will be used as the price per unit of measure for materials, products and/or services added to or deducted from the Contract:

No unit prices are requested.

C. Submit 3 copies of each Application for Payment on AIA Document G702/703, in accordance with the schedule established in the Agreement.

D. For the second Application through the Application submitted at Substantial Completion, submit partial releases of liens from each subcontractor or supplier for whom amounts were requisitioned on the previous payment.

1.5 OWNER FURNISHED ITEMS

A. The Owner Item Control List establishes responsibilities of Owner and Contractor:

1.6 PAYMENT PROCEDURES

A. Submit a Schedule of Values which breaks down the Contract Sum into at least one line item for each Specification Section. Correlate the Schedule of Values with the Contractor's Construction Schedule.
Submit Schedule of Values at least 10 days prior to the first Application for Payment.
C. Submit 3 copies of each Application for Payment on AIA Document G702/703, in accordance with the schedule established in the Agreement.
D. For the second Application through the Application submitted at Substantial Completion, submit partial releases of liens from each subcontractor.

PART 2 - PRODUCTS (Not Applicable)

PART 3 - EXECUTION (Not Applicable)

END OF SECTION 01 200

SECTION 01 300 - ADMINISTRATIVE REQUIREMENTS

PART 1 - GENERAL

1.1 PROJECT MANAGEMENT AND COORDINATION

A. Verify layout information shown on Drawings, in relation to property survey and existing benchmarks, before laying out the Work.
B. Progress meetings will be held at Project site every two weeks. Owner, Architect, Contractor, and each subcontractor or other entity concerned with current progress or involved with planning or coordination of future activities, shall attend. Any of the participants may call additional meetings as needed.

1. Minutes of each meeting will be prepared by Contractor, and distributed to all parties present within three business days of the meeting.

1.2 CONSTRUCTION SCHEDULE

A. Prepare a horizontal bar-chart-type, construction schedule. Provide a separate time bar for each activity and a vertical line to identify the first workday of each week. Use same breakdown of Work indicated in the Schedule of Values. As Work progresses, mark each bar to indicate actual completion.

1. Submit within 10 days of the date established for Commencement of the Work.
2. Prepare the schedule on reproducible media, of width sufficient to show data for the entire construction period.
3. Coordinate each element with other activities. Show each activity in proper sequence. Indicate sequences necessary for completion of related Work.
4. Indicate Substantial Completion and allow time for Architect's procedures necessary for certifying Substantial Completion.
5. Schedule Distribution: Distribute copies to Owner, Architect, subcontractors, and parties required to comply with dates.
6. Updating: Revise the schedule after each meeting or activity where revisions have been made.

1.3 SUBMITTAL PROCEDURES

A. Coordinate submittal preparation with construction schedule, fabrication lead-times, other submittals, and other activities that require sequential operations.

1. No extension of Contract Time will be authorized due to failure to transmit submittals in time to permit processing sufficiently in advance of when materials are required in the Work.
2. Architect will not accept submittals from sources other than Contractor.

B. Prepare submittals by placing a permanent label on each for identification. Provide a 4- by 5-inch (100- by 125-mm) space on the label or beside title block to record review and approval markings and action taken. Include the following information on the label:

1. Project name.
2. Date.
3. Name and address of Contractor.
4. Name and address of subcontractor or supplier.
5. Number and title of appropriate Specification Section.
6. Contractor's certification that materials comply with specified requirements.

C. Product Data: Mark each copy to show applicable choices and options. Include the following:
1. Data indicating compliance with specified standards and requirements.
2. Notation of coordination requirements.
3. For equipment data, include rated capacities, dimensions, weights, required clearances, and furnished specialties and accessories.

D. Shop Drawings: Submit newly prepared information drawn to scale. Indicate deviations from Contract Documents. Do not reproduce Contract Documents or copy standard information. Submit 1 reproducible print and 1 blue- or black-line print on sheets at least 8-1/2 by 11 inches (215 by 280 mm) but no larger than 30 by 42 inches (762 by 1067 mm). Architect will return the reproducible print. Include the following:
1. Dimensions, profiles, methods of attachment, coordination with adjoining work, large scale details, and other information, as appropriate for the Work.
2. Identification of products and materials.
3. Notation of coordination requirements.
4. Notation of dimensions established by field measurement.

E. Samples: Submit Samples finished as specified and identical with the material proposed. Where variations are inherent in the material, submit at least 3 units that show limits of the variations. Include product name or name of the manufacturer.

F. Architect will review each submittal, mark as appropriate to indicate action taken, and return copies less those retained. Compliance with specified requirements remains Contractor's responsibility.

PART 2 - PRODUCTS (Not Applicable)

PART 3 - EXECUTION (Not Applicable)

END OF SECTION 01 300

SECTION 01 400 - QUALITY REQUIREMENTS

PART 1 - GENERAL

1.1 QUALITY CONTROL

A. Quality-control services include inspections, tests, and related actions including reports, performed by Contractor, by independent agencies, and by governing authorities. All layout/survey work to be provided by the Contractor.

B. Owner shall employ and pay a qualified independent testing agency to perform tests and inspections specified in other Sections, and those required by authorities having jurisdiction.
   1. Contractor is responsible for scheduling inspections and tests.

C. Retesting: Contractor shall pay for retesting where results of inspections and tests prove unsatisfactory and indicate noncompliance with requirements.

D. Auxiliary Services: Cooperate with agencies performing inspections and tests. Provide auxiliary services as requested. Notify agency in advance of operations requiring tests or inspections, to permit assignment of personnel. Auxiliary services include the following:
   1. Access to the Work.
   2. Incidental labor and facilities to assist inspections and tests.
   3. Adequate quantities of samples of materials that require testing, and assisting in taking samples.
   4. Facilities for storage and curing of test samples.
   5. Security and protection of samples and test equipment.

E. Duties of Testing Agency: Testing agency shall cooperate with Architect and Contractor in performing its duties. Agency shall provide qualified personnel to perform inspections and tests.
   1. Agency shall notify Architect and Contractor of irregularities or deficiencies observed in the Work during performance of its services.
   2. Agency shall not release, revoke, alter, or enlarge requirements of the Contract Documents or approve or accept any portion of the Work.

   3. Agency shall not perform duties of Contractor.

F. Submittals: Testing agency shall submit a certified written report of each inspection and test to the following:
   1. Owner.

2. Architect.
3. Construction Manager
4. MEP Engineer
5. Authorities having jurisdiction, when authorities so direct.

G. Report Data: Reports of each inspection, test, or similar service shall include at least the following:

1. Date of issue.
2. Project title and number.
3. Name, address, and telephone number of testing agency.
4. Dates and locations of samples and tests or inspections.
5. Names of individuals making the inspection or test.
6. Designation of the Work and test method.
7. Identification of product.
8. Complete inspection or test data.
9. Test results and an interpretation of test results.
10. Ambient conditions at the time of sample taking and testing.
11. Comments or professional opinion on whether inspected or tested Work complies with requirements.
12. Name and signature of laboratory inspector.
13. Recommendations on retesting or re-inspection.

H. Qualifications for Service Agencies: Engage inspection and testing service agencies that are prequalified as complying with the American Council of Independent Laboratories' "Quality Assurance Manual" and that specialize in the types of inspections and tests to be performed.

1. Each agency shall be authorized by authorities having jurisdiction to operate in the state where the Project is located.

PART 2 - PRODUCTS (Not Applicable)

PART 3 - EXECUTION (Not Applicable)

END OF SECTION 01 400

SECTION 01 500 - TEMPORARY FACILITIES AND CONTROLS

PART 1 - GENERAL

1.1 SECTION REQUIREMENTS

A. Standards: Comply with NFPA 241, "Standard for Safeguarding Construction, Alterations, and Demolition Operations"; ANSI A10 Series standards for "Safety Requirements for Construction and Demolition"; and NECA Electrical Design Library's "Temporary Electrical Facilities."

1. Electrical Service: Comply with NEMA, NECA, and UL standards and regulations for temporary electric service. Install service in compliance with NFPA 70.

B. At the earliest possible time, change over from use of temporary utility services to use of permanent utilities.

C. Remove temporary facilities and controls before Substantial Completion. Personnel remaining after Substantial Completion will be permitted to use permanent facilities, under conditions acceptable to Owner.

PART 2 - PRODUCTS

2.1 MATERIALS AND EQUIPMENT

A. Provide new materials and equipment for construction of temporary facilities and controls.

PART 3 - EXECUTION

3.1 TEMPORARY UTILITIES

A. Contractor may use the school's power and utilities for the construction requirements.

B. Provide temporary heat for curing or drying of work, and for protection of new and existing construction from adverse effects of low temperatures. Use of gasoline-burning heaters and open-flame heaters is not permitted.

C. Provide temporary sanitary facilities. Comply with regulations and health codes for type, number, location, and maintenance of facilities. Obtain approval for the location of sanitary facilities with the Owner prior to delivering them to the site.

3.2 TEMPORARY CONSTRUCTION FACILITIES

A. Contractor may utilize the lower level of the existing building below the addition for it's field office, storage, and other support facilities as necessary for efficient prosecution of the Work.
   1. Job meetings will occur in the school conference room.
   2. The room attached to the east side of the garage will be made available to the Contractor for storage.

B. Provide temporary enclosures for protection of construction and workers from exposure and inclement weather and for containment of heat.
   1. Contractor may remove masonry infill on north side of lower level for construction access. Contractor will be responsible for security of this opening during the construction period.

C. Collect waste daily and dispose of waste off-site according to local ordinances, when containers are full.
   1. Handle hazardous, dangerous, or unsanitary waste materials separately from other waste by containerizing properly. Dispose of material according to applicable laws and regulations.

D. Prepare project identification and other signs of the size indicated; install signs in locations as approved by Owner; install signs to inform the public and persons seeking entrance to the Project.
   Support on posts or framing of preservative treated wood or steel. Do not permit installation of signs without authorization of Owner.
   1. Project Identification Sign: Engage an experienced sign painter to apply graphics. Comply with details indicated.
   2. Temporary Signs: Prepare signs to provide directional information to construction personnel and visitors.

3.3 TEMPORARY CONTROLS

A. Provide temporary fire protection until permanent systems supply fire-protection needs.
   1. Provide adequate numbers and types of fire extinguishers.
   2. Store combustible materials in fire-safe containers in fire-safe locations.
   3. Prohibit smoking in hazardous fire-exposure areas.
   4. Supervise welding operations, combustion-type temporary heating units, and similar sources of fire ignition.

B. Provide temporary barricades, warning signs, and lights to protect the public and construction personnel from construction hazards.

1. Enclose construction area with fence(s) with lockable entrance gates, as required to prevent unauthorized vehicular access.

C. Provide temporary environmental controls as required by authorities having jurisdiction including, but not limited to, erosion and sediment control, dust control, noise control, and pollution control.

END OF SECTION 01 500

SECTION 01 600 PRODUCT OPTIONS AND SUBSTITUTIONS

PART 1 GENERAL

1.1 SUMMARY

A. This Section describes procedures for securing approval of proposed product substitutions.

1.2 SECTION REQUIREMENTS

A. Provide products of same kind from a single source.
B. Deliver, store, and handle products according to manufacturer's written instructions, using means and methods that will prevent damage, deterioration, and loss, including theft.
C. Schedule delivery to minimize long-term storage and to prevent overcrowding construction spaces.
D. Deliver in manufacturer's original sealed packaging with labels and written instructions for handling, storing, protecting, and installing.
E. Inspect to ensure compliance with the Contract Documents and to ensure items are undamaged and properly protected.
F. Store heavy items in a manner that will not endanger supporting construction.
G. Store items subject to damage aboveground, under cover in a weathertight enclosure, with ventilation adequate to prevent condensation. Maintain temperature and humidity within range required.

PART 2 - PRODUCTS

2.1 DELAYS

A. Delays in construction arising because of the non-availability of a specified material or method will not be considered by the Owner as justifying an extension of the agreed Time of Completion.

2.2 PRODUCT OPTIONS

A. Provide items that comply with the Contract Documents, are undamaged, and are new at the time of installation.

B. Provide products and equipment complete with accessories, trim, finish, and other devices and components needed for a complete installation and the intended use and effect.

C. Do not attach manufacturer's labels or trademarks, except for required nameplates, on surfaces exposed to view in occupied spaces or on the exterior.

D. Unless otherwise indicated, Architect will select color, pattern, and texture of any product from manufacturer's full range of options.

2.2 PRODUCT SUBSTITUTIONS

A. The Contract is based on standards of quality established in the Contract Documents.
1. In agreeing to the terms and conditions of the Contract, the Contractor has accepted the responsibility to verify that the specified products will be available and to place orders for all required materials in such a timely manner as is needed to meet his agreed construction schedule.
2. The Owner has not agreed to the substitution of materials or methods called for in the Contract Documents, except as they may specifically otherwise state in writing.

B. Where materials and methods are specified by naming one single manufacturer or model number, without stating that equal products will be considered, only the material and method named is approved for incorporation into the Work.

C. Where materials and methods are specified by name or model number, followed by the words "or equal approved in advance by the Owner", materials and methods proposed by the Contractor to be used in lieu of the named materials and methods shall in all ways be equal or exceed the qualities of the named materials and methods.

D. Where the phrase "or equal," or "or equal as approved by the Owner," occurs in the Contract Documents, do not assume that the materials, equipment or methods will be approved as equal unless the item has been specifically so approved, in writing, for this Work by the Owner.

E. The decision of the Owner shall be final.

F. Reasonable and timely requests for substitutions will be considered. Substitutions include changes proposed by the Contractor after award of the Contract, in products and methods of construction required by the Contract Documents.

G. Do not submit unapproved substitutions on Shop drawings.

H. Submit 3 copies of each Request for Product Substitution on the forms provided in the Project Manual.

PART 3 - EXECUTION (Not Applicable)

END OF SECTION 01 600

SECTION 01 700 - EXECUTION REQUIREMENTS

PART 1 - GENERAL

1.1 CLOSEOUT SUBMITTALS

A. Record Drawings: Maintain a set of Contract Drawings as Record Drawings. Mark to show installation that varies from the Work originally shown.

B. Record Specifications: Maintain one copy of the Project Manual, including addenda, as Record Specifications. Mark to show variations in Work performed in comparison with the text of the Specifications and modifications.

C. Operation and Maintenance Data: Organize data into 3-ring binders, with pocket folders for folded sheet information. Mark identification on front and spine of each binder. Include the following:
   1. Emergency instructions.
   2. Spare parts list.
   3. Copies of warranties.
   4. Wiring diagrams.
   5. Shop Drawings and Product Data.

PART 2 - PRODUCTS (Not Applicable)

PART 3 - EXECUTION

3.1 EXAMINATION AND PREPARATION

A. Examine substrates and conditions for compliance with manufacturer's written requirements including, but not limited to, surfaces that are sound, level, and plumb; substrates within installation tolerances; surfaces that are smooth, clean, and free of deleterious substances; and application conditions within environmental limits. Do not proceed with installation until unsatisfactory conditions have been corrected.

B. Prepare substrates and adjoining surfaces according to manufacturer's written instructions, including, but not limited to, the application of fillers and primers.

C. Contractor shall not use building heating systems if use of such system voids any manufacturer's warranties.

3.2 CUTTING AND PATCHING

A. Do not cut or drill into structural members without prior written approval of Architect.
B. For patching, provide materials whose installed performance will equal or surpass that of existing materials. For exposed surfaces, provide or finish materials to visually match existing adjacent surfaces to the fullest extent possible.
C. Contractor is responsible to take necessary precautions to avoid cutting or damaging the reinforcing in the existing precast plank and concrete wall. Contractor will be responsible for repair of structure in the event reinforcing is damaged.

3.3 INSTALLATION

A. Comply with manufacturer's written instructions for installation. Anchor each product securely in place, accurately located and aligned. Clean exposed surfaces and protect from damage. If applicable, prepare surfaces for field finishing.

B. Comply with NFPA 70 for installation of electrically operated equipment and electrical components and materials.

3.4 FINAL CLEANING

A. Clean each surface or item as follows before requesting inspection for certification of Substantial Completion:
1. Remove labels that are not permanent.
2. Clean transparent materials, including interior and exterior windows, dormer windows, and mirrors. Remove excess glazing compounds. Replace chipped or broken glass.
3. Clean exposed finishes to a dust-free condition, free of stains, films, and foreign substances. Leave concrete floors broom clean.
4. Vacuum carpeted surfaces and wax resilient flooring.
5. Wipe surfaces of mechanical and electrical equipment. Remove excess lubrication. Clean plumbing fixtures. Clean light fixtures and lamps.
6. Replace filters, clean coils in HVAC units.
7. Clean the site. Sweep paved areas; remove stains, spills, and foreign deposits. Rake grounds to a smooth, even-textured surface, in condition to receive sod or seed. Site shall be sodded w/ tall fescue and appropriately covered.

3.5 CLOSEOUT PROCEDURES

A. Request Substantial Completion inspection once the following are complete:
   1. Advise Owner of pending insurance changeover requirements.
   2. Submit Record Drawings and Specifications, maintenance manuals, warranties, and similar record information.
   3. Deliver spare parts, extra stock, and similar items.
   4. Changeover locks and transmit keys to Owner.
   5. Complete startup testing of systems and instruction of operation and maintenance personnel.
   6. Remove temporary facilities and controls.
   7. Complete final cleanup.
   8. Touch up, repair, and restore marred, exposed finishes.
   9. Obtain final inspections from authorities having jurisdiction.
   10. Obtain certificate of occupancy.

B. Upon receipt of a request for inspection, Architect will proceed with inspection or advise Contractor of unfilled requirements. Architect will prepare the Certificate of Substantial Completion after inspection or advise Contractor of items that must be completed or corrected before the certificate will be issued.

C. Arrange for each installer of equipment that requires operation and maintenance to provide instruction to Owner's personnel. Include a detailed review of the following:
   1. Startup and shutdown.
   2. Emergency operations and safety procedures.
   3. Noise and vibration adjustments.
   4. Maintenance manuals.
   5. Spare parts, tools, and materials.
   6. Lubricants and fuels.
   7. Identification systems.
   8. Control sequences.
   9. Hazards.
   10. Warranties and bonds.

D. Request inspection for certification of final acceptance and final payment, once the following are complete:
   1. Submit final payment request with releases of liens and supporting documentation. Include insurance certificates.
   2. Submit a copy of the Substantial Completion inspection list stating that each item has

been completed or otherwise resolved for acceptance.

3. N/A

4. Submit consent of surety to final payment.

E. Architect will reinspect the Work on receipt of notice that the Work has been completed. On completion of re-inspection, Architect will prepare a certificate of final acceptance. If the Work is incomplete, Architect will advise Contractor of the Work that is incomplete or obligations that have not yet been fulfilled.

END OF SECTION 01 700

SECTION 01 731 - CUTTING AND PATCHING

PART 1 - GENERAL

1 SUMMARY

A. This Section includes procedural requirements for cutting and patching.

B. See Divisions 2 through 16 Sections for specific requirements and limitations applicable to cutting and patching individual parts of the Work.

C. Requirements in this Section apply to mechanical and electrical installations. See Divisions 15 and 16 Sections for other requirements and limitations applicable to cutting and patching mechanical and electrical installations.

2 SUBMITTALS

A. Cutting and Patching Proposal: Submit a proposal describing procedures at least 10 days before the time cutting and patching will be performed, requesting approval to proceed. Include the following information:

1. Extent: Describe cutting and patching, show how they will be performed, and indicate why they cannot be avoided.
2. Changes to Existing Construction: Describe anticipated results. Include changes to structural elements and operating components as well as changes in building's appearance and other significant visual elements.
3. Products: List products to be used and firms or entities that will perform the Work.
4. Dates: Indicate when cutting and patching will be performed.

1. Utilities: List utilities that cutting and patching procedures will disturb or affect. List utilities that will be relocated and those that will be temporarily out of service. Indicate how long service will be disrupted.
    1. Structural Elements: Where cutting and patching involve adding reinforcement to structural elements, submit details and engineering calculations showing integration of reinforcement with original structure.
    2. Architect's Approval: Obtain approval of cutting and patching proposal before cutting and patching. Approval does not waive right to later require removal and replacement of unsatisfactory work.

1 QUALITY ASSURANCE

A. Structural Elements: Do not cut and patch structural elements in a manner that could change their load-carrying capacity or load-deflection ratio. Do not cut reinforcing in existing precast concrete plank.

B. Operational Elements: Do not cut and patch operating elements and related components in a manner that results in reducing their capacity to perform as intended or that results in increased maintenance or decreased operational life or safety.

C. Miscellaneous Elements: Do not cut and patch the following elements or related components in a manner that could change their load-carrying capacity, that results in reducing their capacity to perform as intended, or that results in increased maintenance or decreased operational life or safety.

D. Visual Requirements: Do not cut and patch construction in a manner that results in visual evidence of cutting and patching. Do not cut and patch construction exposed on the exterior or in occupied spaces in a manner that would, in Architect's

opinion, reduce the building's aesthetic qualities. Remove and replace construction that has been cut and patched in a visually unsatisfactory manner.

1. If possible, retain original Installer or fabricator to cut and patch exposed Work listed below. If it is impossible to engage original Installer or fabricator, engage another recognized, experienced, and specialized firm.

1 WARRANTY

A. Existing Warranties: Remove, replace, patch, and repair materials and surfaces cut or damaged during cutting and patching operations, by methods and with materials so as not to void existing warranties.

PART 1 - PRODUCTS

1 MATERIALS

A. General: Comply with requirements specified in other Sections of these Specifications.

B. Existing Materials: Use materials identical to existing materials. For exposed surfaces, use materials that visually match existing adjacent surfaces to the fullest extent possible.

1. If identical materials are unavailable or cannot be used, use materials that, when installed, will match the visual and functional performance of existing materials.

PART 2 - EXECUTION

1 EXAMINATION

A. Examine surfaces to be cut and patched and conditions under which cutting and patching are to be performed.

1. Compatibility: Before patching, verify compatibility with and suitability of substrates, including compatibility with existing finishes or primers.
2. Proceed with installation only after unsafe or unsatisfactory conditions have been corrected.

2 PREPARATION

A. Temporary Support: Provide temporary support of Work to be cut.

B. Protection: Protect existing construction during cutting and patching to prevent damage. Provide protection from adverse weather conditions for portions of Project that might be exposed during cutting and patching operations.

C. Adjoining Areas: Avoid interference with use of adjoining areas or interruption of free passage to adjoining areas.

D. Existing Services: Where existing services are required to be removed, relocated, or abandoned, bypass such services before cutting to avoid interruption of services to occupied areas.

3 PERFORMANCE

A. General: Employ skilled workers to perform cutting and patching. Proceed with cutting and patching at the earliest feasible time, and complete without delay.

1. Cut existing construction to provide for installation of other components or performance of other construction, and subsequently patch as required to restore surfaces to their original condition.

B. Cutting: Cut existing construction by sawing, drilling, breaking, chipping, grinding, and similar operations, including excavation, using methods least likely to damage elements retained or adjoining construction. If possible, review proposed procedures with original Installer; comply with original Installer's written recommendations.

1. In general, use hand or small power tools designed for sawing and grinding, not hammering and chopping. Cut holes and slots as small as possible, neatly to size required, and with minimum disturbance of adjacent surfaces. Temporarily cover openings when not in use.
2. Existing Finished Surfaces: Cut or drill from the exposed or finished side into concealed surfaces.
3. Concrete or Masonry: Cut using a cutting machine, such as an abrasive saw or a diamond-core drill.
4. Excavating and Backfilling: Comply with requirements in applicable Division 2 Sections where required by cutting and patching operations.
5. Mechanical and Electrical Services: Cut off pipe or conduit in walls or partitions to be removed. Cap, valve, or plug and seal remaining portion of pipe or conduit to prevent entrance of moisture or other foreign matter after cutting.
6. Proceed with patching after construction operations requiring cutting are complete.

C. Patching: Patch construction by filling, repairing, refinishing, closing up, and similar operations following performance of other Work. Patch with durable seams that are as invisible as possible. Provide materials and comply with installation requirements specified in other Sections of these Specifications.

1. Inspection: Where feasible, test and inspect patched areas after completion to demonstrate integrity of installation.
2. Exposed Finishes: Restore exposed finishes of patched areas and extend finish restoration into retained adjoining construction in a manner that will eliminate evidence of patching and refinishing.
3. Floors and Walls: Where walls or partitions that are removed extend one finished area into another, patch and repair floor and wall surfaces in the new space. Provide an even surface of uniform finish, color, texture, and appearance. Remove existing floor and wall coverings and replace with new materials, if necessary, to achieve uniform color and appearance.
4. Ceilings: Patch, repair, or rehang existing ceilings as necessary to provide an even-plane surface of uniform appearance.
5. Exterior Building Enclosure: Patch components in a manner that restores enclosure to a weathertight condition.

END OF SECTION 01 731

SECTION 01 732 - SELECTIVE DEMOLITION

PART 1 - GENERAL

1 SUMMARY

A. This Section includes demolition and removal of the following:
   1. Selected portions of a building or structure.
   2. Selected site elements.
   3. Repair procedures for selective demolition operations.
B. See Division 2 Section "Site Clearing" for site clearing and removal of above- and below-grade improvements.
C. See Division 15 Sections for demolishing, cutting, patching, or relocating mechanical items.
D. See Division 16 Sections for demolishing, cutting, patching, or relocating electrical items.

2 DEFINITIONS

A. Remove: Detach items from existing construction and legally dispose of them off-site, unless indicated to be removed and salvaged or removed and reinstalled.
B. Remove and Salvage: Detach items from existing construction and deliver them to Owner .N/A
C. Remove and Reinstall: Detach items from existing construction, prepare them for reuse, and reinstall them where indicated.
D. Existing to Remain: Existing items of construction that are not to be removed and that are not otherwise indicated to be removed, removed and salvaged, or removed and reinstalled.

3 MATERIALS OWNERSHIP

A. Except for items or materials indicated to be reused, salvaged, reinstalled, or otherwise indicated to remain Owner's property, demolished materials shall become Contractor's property and shall be removed from Project site.

4 SUBMITTALS

A. Proposed Control Measures: Submit statement or drawing that indicates the measures proposed for use, proposed locations, and proposed time frame for their operation. Identify options if proposed measures are later determined to be inadequate. Include measures for the following:
   1. Dust control.
   2. Noise control.
B. Schedule of Selective Demolition Activities: Indicate detailed sequence of selective demolition and removal work, with starting and ending dates for each activity, interruption of utility services, use of elevator and stairs, and locations of temporary partitions and means of egress.
C. Pre-demolition Photographs or Videotape: Show existing conditions of adjoining construction and site improvements that might be misconstrued as damage caused by selective demolition operations. Submit before Work begins.
D. Landfill Records: Indicate receipt and acceptance of hazardous wastes by a landfill facility licensed to accept hazardous wastes.

5 QUALITY ASSURANCE

A. Demolition Firm Qualifications: An experienced firm that has specialized in demolition work similar in material and extent to that indicated for this Project.

B. Regulatory Requirements: Comply with governing EPA notification regulations before beginning selective demolition. Comply with hauling and disposal regulations of authorities having jurisdiction.

C. Standards: Comply with ANSI A10.6 and NFPA 241.

D. Pre-demolition Conference: Conduct conference at Project site.

6 PROJECT CONDITIONS

A. Maintain access to existing walkways, corridors, and other adjacent occupied or used facilities.
   1. Do not close or obstruct walkways, corridors, or other occupied or used facilities without written permission from authorities having jurisdiction.

B. Owner assumes no responsibility for condition of areas to be selectively demolished.
   1. Conditions existing at time of inspection for bidding purpose will be maintained by Owner as far as practical.

C. Hazardous Materials: It is not expected that hazardous materials will be encountered in the Work.
   1. Hazardous materials will be removed by Owner before start of the Work.
   2. If materials suspected of containing hazardous materials are encountered, do not disturb; immediately notify Architect and Owner. Hazardous materials will be removed by Owner under a separate contract.

D. Storage or sale of removed items or materials on-site will not be permitted.

E. Utility Service: Maintain existing utilities indicated to remain in service and protect them against damage during selective demolition operations.
   1. Maintain fire-protection facilities in service during selective demolition operations.

7 WARRANTY

A. Existing Warranties: Remove, replace, patch, and repair materials and surfaces cut or damaged during selective demolition, by methods and with materials so as not to void existing warranties.

1. If possible, retain original Installer or fabricator to patch the exposed Work listed below that is damaged during selective demolition. If it is impossible to engage original Installer or fabricator, engage another recognized experienced and specialized firm.

PART 2 - PRODUCTS

1 REPAIR MATERIALS

A. Use repair materials identical to existing materials.

1. If identical materials are unavailable or cannot be used for exposed surfaces, use materials that visually match existing adjacent surfaces to the fullest extent possible.
2. Use materials whose installed performance equals or surpasses that of existing materials.

PART 3 - EXECUTION

1 EXAMINATION

A. Verify that utilities have been disconnected and capped.
B. Survey existing conditions and correlate with requirements indicated to determine extent of selective demolition required.
C. Inventory and record the condition of items to be removed and reinstalled and items to be removed and salvaged.
D. When unanticipated mechanical, electrical, or structural elements that conflict with intended function or design are encountered, investigate and measure the nature and extent of conflict. Promptly submit a written report to Architect.
E. Engage a professional engineer to survey condition of building to determine whether removing any element might result in structural deficiency or unplanned collapse of any portion of structure or adjacent structures during selective demolition operations.

2 UTILITY SERVICES

A. Existing Utilities: Maintain services indicated to remain and protect them against damage during selective demolition operations.
B. Do not interrupt existing utilities serving occupied or operating facilities unless authorized in writing by Owner and authorities having jurisdiction. Provide temporary services during interruptions to existing utilities, as acceptable to Owner and to authorities having jurisdiction.
A. Utility Requirements: Locate, identify, disconnect, and seal or cap off indicated utilities serving areas to be selectively demolished.
1. Arrange to shut off indicated utilities with utility companies.
2. If utility services are required to be removed, relocated, or abandoned, provide temporary utilities before proceeding with selective demolition that bypass area of selective demolition and that maintain continuity of service to other parts of building.
3. Cut off pipe or conduit in walls or partitions to be removed. Cap, valve, or plug and seal remaining portion of pipe or conduit after bypassing.
B. Utility Requirements: Refer to Division 15 and 16 Sections for shutting off, disconnecting, removing, and sealing or capping utilities. Do not start selective demolition work until utility disconnecting and sealing have been completed and verified in writing.

1 PREPARATION

A. Site Access and Temporary Controls: Conduct selective demolition and debris-removal operations to ensure minimum interference with roads, streets, walks, walkways, and other adjacent occupied and used facilities.
1. Do not close or obstruct streets, walks, walkways, or other adjacent occupied or used facilities without permission from Owner and authorities having jurisdiction. Provide alternate routes around closed or obstructed traffic ways if required by governing regulations.
2. Erect temporary protection, such as walks, fences, railings, canopies, and covered passageways, where required by authorities having jurisdiction.
3. Protect existing site improvements, appurtenances, and landscaping to remain.

A. Temporary Facilities: Provide temporary barricades and other protection required to prevent injury to people and damage to adjacent buildings and facilities to remain.

B. Temporary Enclosures: Provide temporary enclosures for protection of existing building and construction, in progress and completed, from exposure, foul weather, other construction operations, and similar activities. Provide temporary weather-tight enclosure for building exterior.
C. Temporary Partitions: Erect and maintain dustproof partitions and temporary enclosures to limit dust and dirt migration and to separate areas from fumes and noise.
D. Temporary Shoring: Provide and maintain interior and exterior shoring, bracing, or structural support to preserve stability and prevent movement, settlement, or collapse of construction to remain, and to prevent unexpected or uncontrolled movement or collapse of construction being demolished as required.

1 POLLUTION CONTROLS

A. Dust Control: Use water mist, temporary enclosures, and other suitable methods to limit spread of dust and dirt. Comply with governing environmental-protection regulations.
1. Wet mop floors to eliminate trackable dirt and wipe down walls and doors of demolition enclosure. Vacuum carpeted areas.
B. Disposal: Remove and transport debris in a manner that will prevent spillage on adjacent surfaces and areas.
1. Remove debris from elevated portions of building by chute, hoist, or other device that will convey debris to grade level in a controlled descent.
C. Cleaning: Clean adjacent structures and improvements of dust, dirt, and debris caused by selective demolition operations. Return adjacent areas to condition existing before selective demolition operations began.

2 SELECTIVE DEMOLITION

A. General: Demolish and remove existing construction only to the extent required by new construction and as indicated. Use methods required to complete the Work within limitations of governing regulations.
1. Neatly cut openings and holes plumb, square, and true to dimensions required. Use cutting methods least likely to damage construction to remain or adjoining construction.
2. Cut or drill from the exposed or finished side into concealed surfaces to avoid marring existing finished surfaces.
3. Do not use cutting torches until work area is cleared of flammable materials. At concealed spaces, such as duct and pipe interiors, verify condition and contents of hidden space before starting flame-cutting operations. Maintain [fire watch and] portable fire-suppression devices during flame-cutting operations.
4. Locate selective demolition equipment and remove debris and materials so as not to impose excessive loads on supporting walls, floors, or framing.
B. Existing Facilities: Comply with building manager's requirements for using and protecting elevators, stairs, walkways, loading docks, building entries, and other building facilities during selective demolition operations.
C. Removed and Salvaged Items:
1. N/A
D. Removed and Reinstalled Items:
1. N/A
E. Existing Items to Remain: Protect construction indicated to remain against damage and soiling during selective demolition. When permitted by Architect, items may be removed to a suitable, protected storage location during selective demolition and cleaned and reinstalled in their original locations after selective demolition operations are complete.

3 PATCHING AND REPAIRS

A. General: Promptly repair damage to adjacent construction caused by selective demolition operations.
B. Patching: Comply with Division 1 Section "Cutting and Patching."
C. Repairs: Where repairs to existing surfaces are required, patch to produce surfaces suitable for new materials.
1. Completely fill holes and depressions in existing masonry walls that are to remain with an approved masonry patching material applied according to manufacturer's written recommendations.
D. Finishes: Restore exposed finishes of patched areas and extend restoration into adjoining construction in a manner that eliminates evidence of patching and refinishing.
E. Floors and Walls: Where walls or partitions that are demolished extend one finished area into another, patch and repair floor and wall surfaces in the new space. Provide an even surface of uniform finish color, texture, and appearance. Remove existing floor and wall coverings and replace with new materials, if necessary, to achieve uniform color and appearance.
F. Ceilings: Patch, repair, or rehang existing ceilings as necessary to provide an even-plane surface of uniform appearance.

1 DISPOSAL OF DEMOLISHED MATERIALS

A. General: Promptly dispose of demolished materials. Do not allow demolished materials to accumulate on-site.
B. Burning: Do not burn demolished materials.
C. Disposal: Transport demolished materials off Owner's property and legally dispose of them.

END OF SECTION 01 732

SECTION 07 210 - THERMAL INSULATION

PART 1 - GENERAL

1 SECTION REQUIREMENTS

A. Submittals: Product Data.

B. Surface-Burning Characteristics: According to ASTM E 84 by a qualified testing agency. Identify products with appropriate markings of applicable testing agency.

PART 2 - PRODUCTS

1 INSULATION PRODUCTS

A. Glass-Fiber-Blanket Insulation: ASTM C 665, Type I, un-faced with flame-spread and smoke-developed indexes of 25 and 450, respectively.

1. Manufacturers: One of the following:
   a. CertainTeed Corporation.
   b. Guardian Building Products, Inc.
   c. Johns Manville.
   d. Knauf Insulation.
   e. Owens Corning.

B. Mineral-Fiber-Blanket Insulation: ASTM C 665, Type I, un-faced with flame-spread index of 25 or less.

C. Foil Faced Rigid Insulation

1. Description: Foil-faced, rigid foam insulating sheathing product recommended for concealed uses in commercial and residential construction, complying with ASTM C 1289.

2. Construction: Foam bonded on both sides in the manufacturing process to foil facers. One side has a printed reflective foil facer and the other side has a printed non-reflective foil facer.

3. Foam: Closed cell polyisocyanurate, CFC- and HCFC-free.

4. Service Temperature: -100 degrees F to 250 degrees F (-73 degrees C to 122 degrees C).

5. Physical Properties:
   a. Thermal Resistance, 1 Inch, ASTM C 518: 6.0 degrees F per square foot per hour per BTU.
   b. Compressive Strength, ASTM D 1621: 16 psi or greater.
   c. Flexural Strength, ASTM C 203: 40 psi or greater.
   d. Water Absorption, ASTM C 209: 0.1 percent by volume.
   e. Water Vapor Permeance, ASTM E 96, 0.05 perms.
   f. Surface Burning Characteristics, ASTM E84, foam core 25 or less flame spread, 450 or less smoke developed.

B. Size: Refer to the Drawings for required R-Value.

C. Compliance: Third party quality control agency follow-up service requirements:
1. Underwriters Laboratories: Must comply with current UL File R10167 audit manual at manufacturing locations.
2. Factory Mutual: Tested per ASTM E84 Test Method for Surface Burning Characteristics.

1 ACCESSORIES

A. Sheet Radiant Barrier: ASTM C 1313, foil on one side, flame-spread and smoke-developed indexes of 75 and 450, respectively, and water-vapor transmission of 5 perms or greater.

1. Products:
   a. Fi-Foil Company; Radiant Shield.
   b. Innovative Energy, Inc.; R+Heatshield Commercial Solid
   c. Innovative Insulation, Inc.; Super R Plus.
   d. TVM Building Products; Reflective Vapor Barrier.

A. Vapor Retarder: Fire-retardant, reinforced polyethylene, [6 mils (0.15 mm)]
1. Products:
   a. Raven Industries Inc.; DURA-SKRIM 6WW.
   b. Reef Industries, Inc.; Griffolyn T-65.

PART 1 - EXECUTION
1 INSTALLATION
A. Install insulation in areas and in thicknesses indicated or required to produce R-values indicated. Cut and fit tightly around obstructions and fill voids with insulation.
B. Maintain 3-inch (76-mm) clearance of insulation around recessed lighting fixtures not rated for or protected from contact with insulation.
C. Install eave ventilation troughs between roof framing members in insulated attic spaces at vented eaves.
D. Except for loose-fill insulation and insulation that is friction fitted in stud cavities, bond units to substrate with adhesive or use mechanical anchorage to provide permanent placement and support of units.
E. Extend vapor retarder to extremities of areas to be protected from vapor transmission. Secure in place with adhesives or other anchorage. Locate seams at framing members, overlap, and seal with tape. Seal joints caused by pipes, conduits, electrical boxes, and similar items with tape.

END OF SECTION 07 210

SECTION 08710 - DOOR HARDWARE

1.GENERAL

1. SECTION REQUIREMENTS
   A. Submittals: Hardware schedule and keying schedule.
   B. Refer to Owner Control List for Owner Provided Materials
   C.

2.PRODUCTS

1. HARDWARE
   A. Fire-Resistance-Rated Assemblies: Provide products that comply with NFPA 80 and are listed and labeled by a testing and inspecting agency acceptable to authorities having jurisdiction for applications indicated. On exit devices provide label indicating "Fire Exit Hardware."
   B. Hinges:

      1. Manufacturers: One of the following:
         a. Yale Security Inc.; an ASSA ABLOY Group company.
         b. Hager Companies.
         c. IVES Hardware; an Ingersoll-Rand company.
         d. Lawrence Hardware Inc.
         e. McKinney Products Company; an ASSA ABLOY Group company.
         f. PBB, Inc.
      1. Brass/bronze hinges with stainless-steel pins for exterior.
      2. Non-removable hinge pins for exterior and public interior exposure.
      3. Ball-bearing hinges for doors with closers and entry doors.
      4. Two hinges for 1-3/8-inch- (35-mm-) thick wood doors.
      5. Three hinges for 1-3/4-inch- (45-mm-) thick doors 90 inches (2300 mm) or less in height; four hinges for doors more than 90 inches (2300 mm) in height.

   C. Locksets and Latchsets:
      1. Manufacturers:
         a. Basis of Design: Yale Security Inc.; an ASSA ABLOY Group company.

         Acceptable Manufacturers:
         a. Adams Rite Manufacturing Co.; an ASSA ABLOY Group company.
         b. Arrow USA; an ASSA ABLOY Group company.
         c. Best Access Systems; Div. of Stanley Security Solutions, Inc.
         d. Cal-Royal Products, Inc.
         e. Corbin Russwin Architectural Hardware; n ASSA ABLOY Group Company.
         f. Falcon Lock; an Ingersoll-Rand Company.

g. Hager Companies.
h. K2 Commercial Hardware; a Black & Decker Corp. company.
i. Marks USA.
j. Medeco Security Locks, Inc.; an ASSA ABLOY Group company.
k. PDQ Manufacturing.
l. SARGENT Manufacturing Company; an ASSA ABLOY Group company.
m. Schlage Commercial Lock Division; an Ingersoll-Rand company.
n. Weiser Lock Corp.; a Black & Decker Corp. company.

1. BHMA A156.2, Series 4000, Grade 2 for bored locks and latches.
2. BHMA A156.3, Grade 1 for exit devices.
3. BHMA A156.5, Grade 2 for auxiliary locks.
4. BHMA A156.12, Series 5000, Grade 2 for interconnected locks and latches.
5. BHMA A156.13, Series 1000, Grade 2] for mortise locks and latches.
6. Lever handles on locksets and latchsets,
   a. Yale: Monroe MO
   b. Lever: Cast Zinc
   c. Rose: Wrought Brass
7. Provide trim on exit devices matching locksets.

D. Key locks to Owner's new master-key system.
1. Provide cores from Owner's Locksmith: Baltimore Lock and Key
2. Cylinders with six-pin tumblers.
3. Provide cylinders for overhead doors and storefront doors, and other locking doors that do not require other hardware.
4. Provide construction keying.
5. Provide key control system, including cabinet.

E. Closers:
1. Manufacturers:
a. Basis of Design: Yale Security Inc.; an ASSA ABLOY Group company.
Acceptable Manufacturers:
a. Corbin Russwin Architectural Hardware; an ASSA ABLOY Group company.
b. DORMA Architectural Hardware; Member of The DORMA Group North America.
c. Dor-O-Matic; an Ingersoll-Rand company.
d. K2 Commercial Hardware; a Black & Decker Corp. company.
e. LCN Closers; an Ingersoll-Rand company.
f. Norton Door Controls; an ASSA ABLOY Group company.
g. Rixson Specialty Door Controls; an ASSA ABLOY Group company.

Dr #	Location	Material	Hardware Set	KEY TO OWNER'S KEYING
01	Library Entrance	Oak/Glass	A	
02	Library Egress Door	Oak	B	
03	Library Restroom	Oak	C	
04	Mechanical RM	Oak	D	
05	Library Supply Room	Oak	D	
06	Theater Storage	Metal	D	

h. SARGENT Manufacturing Company; an ASSA ABLOY Group company.

2. Mount closers on interior side (room side) of door opening. Provide regular-arm, parallel-arm, or top-jamb-mounted closers as necessary.
3. Adjustable delayed opening (accessible to people with disabilities) feature on closers.

F. Provide wall stops or floor stops for doors without closers.

G. Hardware Finishes:

1. Hinges: Matching finish of lockset/latchset.
2. Locksets, Latchsets, and Exit Devices: Dark Oxidized Satin Bronze 613E
3. Closers: Bronze enamel
4. Other Hardware: Matching finish of lockset/latchset.

3.EXECUTION

1. INSTALLATION

A. Mount hardware in locations required to comply with governing regulations and according to SDI A250.8 and DHI WDHS.3.

B. Key Control System: Tag keys and place them on markers and hooks in key control system cabinet.

C. Deliver keys to Owner.

D.

2. HARDWARE SCHEDULE

Hardware Set A: @ Library Entrance

6 EACH	HINGES BB5004 4.5" × 4.5" (450) 613 [US10B]	BOMMER
9 EACH	SILENCER 1229A GREY FOR METAL FRAME	TRIMCO
2 EACH	KICKPLATE K0050 6" × 34".050 613	TRIMCO
1 EACH	SURFACE CLOSER Lcn 4040xp-3049cns AL Hold Open Arm ALUM	LCN
1 EACH	MORTISE CLASSROOM LOCK MR 148 MIA RHR 613	PDQ
1 EACH	MORTISE CLASSROOM LOCK MR 148 MIA LHR 613	PDQ
2 EACH	446 Door Stop, 1-1/2" Height, 1-1/4" Base	ROCKWOOD

Hardware Set B: @ Library Egress

3 EACH	HINGES BB5004 4.5" × 4.5" (450) 613 [US10B]	BOMMER
3 EACH	SILENCER 1229A GREY FOR METAL FRAME	TRIMCO
1 EACH	KICKPLATE K0050 6" × 34".050 613	TRIMCO
1 EACH	SURFACE CLOSER Lcn 4040xp-3049cns AL Hold Open Arm ALUM	LCN
1 EACH	MORTISE CLASSROOM LOCK MR 148 MIA RHR 613	PDQ
1 EACH	446 Door Stop, 1-1/2" Height, 1-1/4" Base	ROCKWOOD

Hardware Set C: @ Library Restroom

3 EACH	HINGES BB5004 4.5" × 4.5" (450) 613 [US10B]	BOMMER
3 EACH	SILENCER 1229A GREY FOR METAL FRAME	TRIMCO
1 EACH	KICKPLATE K0050 6" × 34".050 613	TRIMCO
1 EACH	CYLINDER LOCKSET, GT SERIES, GRADE 1, PRIVACY MIAMI 613	PDQ
1 EACH	446 Door Stop R, 1-1/2" Height, 1-1/4" Base	ROCKWOOD

Hardware Set D: Mechanical Room and Library Supply Room

6 EACH	HINGES BB5004 4.5" × 4.5" (450) 613 [US10B]	BOMMER
9 EACH	SILENCER 1229A GREY FOR METAL FRAME	TRIMCO
2 EACH	KICKPLATE K0050 6" × 34".050 613	TRIMCO
1 EACH	SURFACE CLOSER Lcn 4040xp-3049cns AL Hold Open Arm ALUM	LCN
1 EACH	CYLINDER LOCK GT SERIES GRADE 1 MIA 613	PDQ
1 EACH	CYLINDER LOCK DUMMY GT SERIES GRADE MIA 613	PDQ
2 EACH	446 Door Stop, 1-1/2" Height, 1-1/4" Base	ROCKWOOD

END OF SECTION 08 710

Section 09 62 29 – Cork Flooring

PART 1 – GENERAL

1.1 SUMMARY

1. Section includes: glue-down cork floor tile, adhesives, primers, site-applied finish, and transition accessories.

1.2 REFERENCES

1. ASTM F3008 – Standard Specification for Cork Floor Tile.
2. ASTM F710 – Preparing Concrete Floors to Receive Resilient Flooring.
3. ASTM F2170 – Relative Humidity in Concrete Slabs Using In Situ Probes.
4. ASTM F1869 – Moisture Vapor Emission Rate (Calcium Chloride).
5. ASTM E648 / NFPA 253 – Critical Radiant Flux of Floor-Covering Systems.
6. ASTM E662 – Specific Optical Density of Smoke.
7. ASTM F970 – Static Load Limit.
8. CDPH Standard Method v1.2 (FloorScore or equivalent) – VOC emissions.

1.3 SUBMITTALS

1. Product data for tile, adhesive, primer, and finish.
2. Samples: two 12 x 12 in. samples of each color and grain, showing finish sheen.
3. Moisture and pH test reports for each substrate area.
4. Maintenance data for inclusion in O&M manuals.
5. Sustainability documentation: FloorScore certificate, recycled/rapidly renewable content, EPD where available.

1.4 QUALITY ASSURANCE

1. Installer: minimum 3 years' experience installing cork flooring of similar scope, approved by manufacturer.
2. Mockup: [100 sq. ft.] in location directed by Architect; approved mockup may remain as part of the Work.

1.5 DELIVERY, STORAGE, AND HANDLING

1. Deliver in manufacturer's unopened cartons, labeled with lot number. Store flat, indoors, off the slab.
2. Acclimate tiles in installation spaces a minimum of 72 hours before installation.

1.6 FIELD CONDITIONS

1. Maintain 65–80°F and 35–55% RH for 72 hours before, during, and 48 hours after installation.
2. Do not install until building is enclosed, wet work is complete, and permanent HVAC is operating.

1.7 WARRANTY

1. Manufacturer's limited warranty against manufacturing defects: [10] years.
2. Installer's warranty against defects in installation: 1 year from Substantial Completion.

1.8 EXTRA MATERIALS

1. Furnish 5 percent of each color and pattern installed, from the same production lot, in labeled cartons.

PART 2 – PRODUCTS

2.1 MANUFACTURERS

1. Basis of design: Capri Collections TLP and Cork Floor Finish. capricollections.com. 800 492-2613
2. Obtain tile, adhesive, and finish from a single source or as a manufacturer-approved system.

2.2 CORK FLOOR TILE TWO TYPES

1. Description: agglomerated natural cork bark granules bound with polyurethane binder, homogeneous through thickness; ASTM F3008.
2. Thickness: 3/16 in. (4.8 mm)
3. Size:12 x 24 in.; square-cut edges
4. Factory finish: hardwax oil.
5. TYPE 1:2.0 CLASSIC: COLOR: LIGHT GD2600H*
6. TYPE 2: RIGATO: PICK-UP STRIPS LIGHT GD2603H

2.3 PERFORMANCE REQUIREMENTS

1. Critical radiant flux, ASTM E648: Class I, 0.45 W/sq. cm minimum [Class II, 0.22 W/sq. cm, where permitted by code].
2. Smoke density, ASTM E662: 450 or less.
3. Static load, ASTM F970: residual indentation not more than 0.005 in. at [250] psi.
4. VOC emissions: compliant with CDPH Standard Method v1.2; FloorScore certified.
5. Acoustics (where specified): report ΔIIC per ASTM E2179 for the installed assembly

2.4 INSTALLATION MATERIALS

1. Adhesive: manufacturer's recommended water-based contact or pressure-sensitive adhesive, VOC content not more than 50 g/L.
2. Primer: as required by adhesive manufacturer for the substrate.
3. Patching and leveling compound: Portland-cement-based, as recommended by flooring manufacturer.
4. Site-applied finish: manufacturer's recommended water-based polyurethane, 3 coats, matte

2.5 ACCESSORIES

1. Transition strips and reducers: wood, profile to suit adjacent flooring heights.
2. Base: Vinyl Base Per Drawings

PART 3 – EXECUTION

3.1 EXAMINATION

1. Verify substrates are dry, clean, sound, and flat to within 3/16 in. in 10 ft., and free of curing compounds, sealers, and residual adhesives.
2. Moisture testing of concrete: perform per ASTM F2170 (in situ RH) [and ASTM F1869]. Do not proceed where results exceed manufacturer's limits [75% RH] [3 lb/1000 sq. ft./24 hr];
3. Alkalinity: pH between 7 and 9 unless otherwise permitted by adhesive manufacturer.
4. Wood subfloors: minimum 1/4 in. APA underlayment-grade panel over structurally sound subfloor; moisture content within manufacturer's limits.

5. Proceed only after unsatisfactory conditions are corrected; installation constitutes acceptance of substrate.

3.2 PREPARATION

1. Prepare concrete per ASTM F710. Fill cracks, joints, and depressions with patching compound; grind high spots.
2. Vacuum substrate immediately before priming or applying adhesive.
3. Blend tiles from several cartons to distribute natural color variation.

3.3 INSTALLATION

1. Install per manufacturer's written instructions. Lay out from room centerlines so perimeter tiles are not less than one-half tile width.
2. Apply adhesive with recommended trowel or roller; observe open and tack times. For contact adhesive, coat both substrate and tile backs.
3. Set tiles with tight, flush joints; do not slide into place. Roll in both directions with a 100 lb roller [or as recommended].
4. Scribe neatly to walls, columns, door frames, and fixed casework; undercut door casings.
5. Remove excess adhesive immediately with manufacturer-approved cleaner.

3.4 FIELD FINISHING

1. Where tiles are unfinished or field finish is specified, lightly abrade and vacuum after adhesive cure, then apply [2] [3] coats of finish, abrading between coats.
2. Seal perimeter and joint edges in wet areas as recommended by manufacturer.

3.5 CLEANING AND PROTECTION

1. Restrict foot traffic for 24 hours and rolling loads for 72 hours after installation [or per manufacturer].
2. Protect finished floors with breathable, non-staining covering until Substantial Completion; do not use plastic sheeting or tape directly on finish.
3. Install felt or non-staining protectors on furniture and equipment legs.
4. Clean with neutral pH cleaner per manufacturer's maintenance instructions before final inspection.

END OF SECTION 09 62 29

SECTION 09 20 60 - GYPSUM BOARD ASSEMBLIES

1.GENERAL

1. SUMMARY

A. This Section includes the following:

1. Interior gypsum wallboard.

2. Tile backing panels.
3. Non-load-bearing steel framing.

2. SUBMITTALS

A. Product Data: For each product indicated.

B. Samples: For each textured finish indicated and on same backing indicated for Work.

3. QUALITY ASSURANCE

A. Fire-Test-Response Characteristics: For gypsum board assemblies with fire-resistance ratings, provide materials and construction identical to those tested in assembly indicated according to ASTM E 119 by an independent testing and inspecting agency acceptable to authorities having jurisdiction.

B. Sound Transmission Characteristics: For gypsum board assemblies with STC ratings, provide materials and construction identical to those tested in assembly indicated according to ASTM E 90 and classified according to ASTM E 413 by a qualified independent testing agency.

2. PRODUCTS

1. MANUFACTURERS

A. In other Part 2 articles where subparagraph titles below introduce lists, the following requirements apply for product selection:

1. Available Products: Subject to compliance with requirements, products that may be incorporated into the Work include, but are not limited to, the products specified.
2. Products: Subject to compliance with requirements, provide one of the products specified.
3. Product: Subject to compliance with requirements, provide the product specified.

2. NON-STRUCTURAL STEEL FRAMING

A. Steel Framing, General: Comply with ASTM A1003, Standard Specification for Steel Sheet, Carbon, Metallic- and Non-metallic-coated for Cold-formed Framing Members,

1. Steel Sheet Components: Metal complying with ASTM C 645 requirements.

a. Protective Coating:

1) Interior Applications: ASTM A 653/A 653M, G40 (Z120), hot-dip galvanized.

B. Suspended Ceiling and Soffit Framing:

1. Tie Wire: ASTM A 641/A 641M, Class 1 zinc coating, soft temper, 0.0625-inch- (1.59-mm-) diameter wire, or double strand of 0.0475-inch- (1.21-mm-) diameter wire.
2. Hanger Attachments to Concrete:

a. Anchors: Fabricated from corrosion-resistant materials with holes or loops for attaching hanger wires and capable of sustaining, without failure, a load equal to 5 times that imposed by construction as determined by testing according to ASTM E 488 by a qualified independent testing agency.

1) Type: Cast-in-place anchor, designed for attachment to concrete forms.

b. Powder-Actuated Fasteners: Suitable for application indicated, fabricated from corrosion-resistant materials, with clips or other devices for attaching hangers of type indicated, and capable of sustaining, without failure, a load equal to 10 times that imposed by construction as determined by testing according to ASTM E 1190 by a qualified independent testing agency.

3. Wire Hangers: ASTM A 641/A 641M, Class 1 zinc coating, soft temper, 0.162-inch (4.12-mm) diameter.
4. Carrying Channels: Cold-rolled, commercial-steel sheet with a base metal thickness of 0.0538 inch (1.37 mm), a minimum 1/2-inch- (12.7-mm-) wide flange, and in depth indicated.
5. Furring Channels (Furring Members):

a. Cold Rolled Channels: 0.0538-inch (1.37-mm) bare steel thickness, with minimum 1/2-inch- (12.7-mm-) wide flange, 3/4 inch (19.1 mm) deep.
b. Steel Studs: ASTM C 645, in depth indicated.

1) Minimum Base Metal Thickness: 0.0179 inch (0.45 mm).

c. Hat-Shaped, Rigid Furring Channels: ASTM C 645, 7/8 inch (22.2 mm) deep.

1) Minimum Base Metal Thickness: 0.0179 inch (0.45 mm).

d. Resilient Furring Channels: 1/2-inch- (12.7-mm-) deep members designed to reduce sound transmission, and hat shaped with two legs.

C. Grid Suspension System for Interior Ceilings: ASTM C 645, direct-hung system composed of main beams and cross-furring members that interlock.

1. Available Products:

a. Armstrong World Industries, Inc.; Furring Systems/Drywall.
b. Chicago Metallic Corporation; Fire Front 630 System.
c. USG Interiors, Inc.; Drywall Suspension System.
d.

D. Partition and Soffit Framing:

1. Steel Studs and Runners: ASTM C 645, in depth indicated.

a. Minimum Base Metal Thickness: 0.0179 inch (0.45 mm).

2. Deep-Leg Deflection Track: ASTM C 645 top runner with 2-inch- (50.8-mm-) deep flanges.
3. Proprietary Deflection Track: Steel sheet top runner manufactured to prevent cracking of gypsum board applied to interior partitions resulting from deflection of structure above; in thickness indicated for studs and in width to accommodate depth of studs.

a. Available Products:

1) Delta Star, Inc., Superior Metal Trim; Superior Flex Track System (SFT).
2) Metal-Lite, Inc.; Slotted Track.
3)

4. Proprietary Firestop Track: Top runner manufactured to allow partition heads to expand and contract with movement of the structure while maintaining continuity of fire-resistance-rated assembly indicated; in thickness not less than indicated for studs and in width to accommodate depth of studs.

a. Available Products:

1) Fire Trak Corp.; Fire Tra
2) Metal-Lite, Inc.; The System.
3)

5. Flat Strap and Backing Plate: Steel sheet for blocking and bracing in length and width indicated.

a. Minimum Base Metal Thickness: 0.0179 inch (0.45 mm).

6. Cold-Rolled Channel Bridging: 0.0538-inch (1.37-mm) bare steel thickness, with minimum 1/2-inch- (12.7-mm-) wide flange, and in depth indicated.

a. Clip Angle: 1-1/2 by 1-1/2 inch (38.1 by 38.1 mm), 0.068-inch- (1.73-mm-) thick, galvanized steel.

7. Hat-Shaped, Rigid Furring Channels: ASTM C 645, in depth indicated.

a. Minimum Base Metal Thickness: 0.0179 inch (0.45 mm.

8. Resilient Furring Channels: 1/2-inch- (12.7-mm-) deep, steel sheet members designed to reduce sound transmission. Asymmetrical or hat shaped, with face attached to single flange by a slotted leg (web) or attached to two flanges by slotted or expanded metal legs.

9. Fasteners for Metal Framing: Of type, material, size, corrosion resistance, holding power, and other properties required to fasten steel members to substrates.

3. PANEL PRODUCTS

A. Panel Size, General: Provide in maximum lengths and widths available that will minimize joints in each area and correspond with support system indicated.

B. Gypsum Wallboard: ASTM C 36.

1. Regular Type: In thickness indicated and with long edges tapered.
2. Type X: In thickness indicated and with long edges tapered.

C. Flexible Gypsum Wallboard: ASTM C 36, manufactured to bend to fit tight radii and to be more flexible than standard regular-type panels of the same thickness, 1/4 inch (6.4 mm) thick, and with long edges tapered. Apply in double layer at curved assemblies.

D. Sag-Resistant Gypsum Wallboard: ASTM C 36, manufactured to have more sag resistance than regular-type gypsum board, 1/2 inch (12.7 mm) thick, and with long edges tapered. Apply on ceiling surfaces.

E. Proprietary, Special Fire-Resistive Type: ASTM C 36, having improved fire resistance over standard Type X, complying with requirements of fire-resistance-rated assemblies indicated, in thickness indicated, and with long edges tapered].

F. Exterior Gypsum Panels for Ceilings and Soffits:

1. Exterior Gypsum Soffit Board: ASTM C 931/C 931M, with core type and in thickness indicated and with manufacturer's standard edges.
2. Glass-Mat Gypsum Sheathing Board: ASTM C 1177/C 1177M, with core type and in thickness indicated.

a. Product: G-P Gypsum Corp; Dens-Glass Gold.

G. Tile Backing Panels:

1. Water-Resistant Gypsum Backing Board: ASTM C 630/C 630M, with core type and in thickness indicated.
2. Glass-Mat, Water-Resistant Backing Board: ASTM C 1178/C 1178M, with core type and in thickness indicated.

a. Product: G-P Gypsum Corp.; Dens-Shield Tile Backer.

3. Cementitious Backer Units: ANSI A118.9, in thickness indicated.

4. TRIM ACCESSORIES

A. Interior Trim: ASTM C 1047.

1. Cornerbead: Use at outside corners.
2. LC-Bead: Use at exposed panel edges.
3. Expansion/Control Joint: Control joints shall be installed where a wall or partition runs in an uninterrupted straight plane exceeding 30 linear feet (9100 mm).

5. JOINT TREATMENT MATERIALS

A. General: Comply with ASTM C 475.

B. Joint Tape:

1. Interior Gypsum Wallboard: Paper.
2. Exterior Gypsum Soffit Board: Paper.
3. Glass-Mat Gypsum Sheathing Board: 10-by-10 glass mesh.
4. Tile Backing Panels: As recommended by panel manufacturer.

C. Joint Compound for Interior Gypsum Wallboard: For each coat use formulation that is compatible with other compounds applied on previous or for successive coats.

1. Prefilling: At open joints and damaged surface areas, use setting-type taping compound.
2. Embedding and First Coat: For embedding tape and first coat on joints, flanges of trim accessories, and fasteners, use drying-type, all-purpose compound.

a. Use setting-type compound for installing paper-faced metal trim accessories.

3. Fill Coat: For second coat, use drying-type, all-purpose compound.
4. Finish Coat: For third coat, use drying-type, all-purpose compound.
5. Skim Coat: For final coat of Level 5 finish, use drying-type, all-purpose compound.

D. Joint Compound for Tile Backing Panels:

1. Water-Resistant Gypsum Backing Board: Use setting-type taping and setting-type, sandable topping compounds.
2. Glass-Mat, Water-Resistant Backing Panel: As recommended by manufacturer.
3. Cementitious Backer Units: As recommended by manufacturer.

6. AUXILIARY MATERIALS

A. General: Provide auxiliary materials that comply with referenced installation standards and manufacturer's written recommendations.

B. Sound Attenuation Blankets: ASTM C 665, Type I (blankets without membrane facing) produced by combining thermosetting resins with mineral fibers manufactured from glass, slag wool, or rock wool.

1. Fire-Resistance-Rated Assemblies: Comply with mineral-fiber requirements of assembly.

7. TEXTURE FINISHES. N/A

3.EXECUTION

1. NON-LOAD-BEARING STEEL FRAMING INSTALLATION

A. General: Comply with ASTM C 754, and ASTM C 840 requirements that apply to framing installation.

B. Suspended Ceiling and Soffit Framing:

1. Suspend ceiling hangers plumb and free from contact with insulation or other objects within ceiling plenum that are not part of supporting structural or ceiling suspension system. Splay hangers only where required to miss obstructions and offset resulting horizontal forces by bracing, countersplaying, or other equally effective means.
2. Where width of ducts and other construction within ceiling plenum produces hanger spacings that interfere with the location of hangers required to support standard suspension system members, install supplemental suspension members and hangers in form of trapezes or equivalent devices. Size supplemental suspension members and hangers to support ceiling loads within performance limits established by referenced standards.
3. Attach hangers to structural members. Do not support ceilings from or attach hangers to permanent metal forms, steel deck tabs, steel roof decks, ducts, pipes, or conduit.
4. Screw furring to wood framing.
5. Wire-tie or clip furring channels to supports.
6. Grid Suspension System: Attach perimeter wall track or angle where grid suspension system meets vertical surfaces. Mechanically join main beam and cross-furring members to each other and butt-cut to fit into wall track.

C. Partition and Soffit Framing:

1. Where studs are installed directly against exterior walls, install isolation strip between studs and wall.
2. Extend partition framing full height to structural supports or substrates above suspended ceilings, except where partitions are indicated to terminate at suspended ceilings. Continue framing over frames for doors and openings and frame around ducts penetrating partitions above ceiling to provide support for gypsum board.
3. Frame door openings to comply with GA-600 and with gypsum board manufacturer's applicable written recommendations, unless otherwise indicated. Screw vertical studs at jambs to jamb anchor clips on door frames; install runner track section (for cripple studs) at head and secure to jamb studs.

a. Install two studs at each jamb, unless otherwise indicated.
b. Extend jamb studs through suspended ceilings and attach to underside of floor or roof structure above.

4. Frame openings other than door openings the same as required for door openings, unless otherwise indicated. Install framing below sills of openings to match framing required above door heads.

D. Z-Furring Members: Erect insulation vertically and hold in place with Z-furring members.

1. Until gypsum board is installed, hold insulation in place with 10-inch (250-mm) staples fabricated from 0.0625-inch- (1.59-mm-) diameter, tie wire and inserted through slot in web of member.

E. Polyethylene Vapor Retarder: Install to comply with requirements specified in Division 7 Section "Building Insulation."

2. PANEL PRODUCT INSTALLATION

A. Gypsum Board: Comply with ASTM C 840 and GA-216.

1. Space screws a maximum of 12 inches (304.8 mm) o.c. for vertical applications.
2. Space fasteners in panels that are tile substrates a maximum of 8 inches (203.2 mm) o.c.
3. On ceilings, apply gypsum panels before wall/partition board application to the greatest extent possible and at right angles to framing, unless otherwise indicated.
4. On partitions/walls, apply gypsum panels horizontally (perpendicular to framing), unless otherwise indicated or required by fire-resistance-rated assembly, and minimize end joints.

a. Stagger abutting end joints not less than one framing member in alternate courses of board.
b. At stairwells and other high walls, install panels horizontally, unless otherwise indicated or required by fire-resistance-rated assembly.

5. On Z-furring members, apply gypsum panels vertically (parallel to framing) with no end joints. Locate edge joints over furring members.
6. Single-Layer Fastening Methods: Apply gypsum panels to supports with steel drill screws.
7. Multilayer Fastening Methods: Fasten base layers [and face layers separately to supports with screws] [with screws; fasten face layers with adhesive and supplementary fasteners].
8. Laminating to Substrate: Comply with gypsum board manufacturer's written recommendations and temporarily brace or fasten gypsum panels until fastening adhesive has set.

B. Exterior Ceilings and Soffits: Apply exterior gypsum panels perpendicular to supports, with end joints staggered and located over supports.

1. Fasten with corrosion-resistant screws.

C. Tile Backing Panels:

1. Water-Resistant Gypsum Backing Board: Install with 1/4-inch (6.4-mm) gap where panels abut other construction or penetrations.
2. Glass-Mat, Water-Resistant Backing Panel: Install with 1/4-inch (6.4-mm) gap where panels abut other construction or penetrations.
3. Cementitious Backer Unit Application: ANSI A108.11.

3. FINISHING

A. Installing Trim Accessories: For trim with back flanges intended for fasteners, attach to framing with same fasteners used for panels. Otherwise, attach trim according to manufacturer's written instructions.

B. Finishing Gypsum Board Panels: Treat gypsum board joints, interior angles, edge trim, control joints, penetrations, fastener heads, surface defects, and elsewhere as required to prepare gypsum board surfaces for decoration.

1. Prefill open joints, rounded or beveled edges, and damaged surface areas.

2. Apply joint tape over gypsum board joints, except those with trim having flanges not intended for tape.
3. Glass-Mat Gypsum Sheathing Board: Finish according to manufacturer's written instructions for use as exposed soffit board.
4. Glass-Mat, Water-Resistant Backing Panels: Finish according to manufacturer's written instructions.

C. Cementitious Backer Units: Finish according to manufacturer's written instructions.

D. Gypsum Board Finish Levels: Finish panels to levels indicated below, according to ASTM C 840, for locations indicated:
1.
2. Level 4: Embed tape and apply separate first, fill, and finish coats of joint compound to tape, fasteners, and trim flanges at panel surfaces that will be exposed to view, unless otherwise indicated.

END OF SECTION 09260

Section 09 65 16 – Linoleum Sheet Flooring

Basis of design

The basis of design is Tarkett LinoFloor xf Veneto. It is 2.5 mm homogeneous sheet linoleum on a jute backing, with the xf factory surface treatment, meeting ASTM F2034 Type I. The values below come from Tarkett North America's LinoFloor xf product specification (09/2022); confirm against the current sheet at submittal.

Property	Value
Thickness	2.5 mm (0.098")
Weight	5.35 lb/yd² (2.9 kg/m²)
Roll size	6'-6" (2 m) wide x 65'–100' (20–30 m) long
Classification	ASTM F2034 Type I
Static load (ASTM F970)	≤ 0.005" residual indentation at 150 psi
Critical radiant flux (ASTM E648)	≥ 0.45 W/cm², Class I
Smoke density (ASTM E662)	≤ 450
Slip resistance (ASTM D2047)	SCOF ≥ 0.5
Warranty	Limited 10-year

Part 1 – General

1.1 Summary

1. Section includes: homogeneous linoleum sheet flooring with heat-welded seams, adhesives, weld rod, underlayment patching and leveling compounds, and transition strips.
    a. N/A

1.2 References

1. ASTM F2034: Sheet linoleum floor covering.
2. ASTM F710: Preparing concrete floors to receive resilient flooring.
3. ASTM F2170: Relative humidity in concrete slabs using in situ probes.
4. ASTM F1869: Moisture vapor emission rate of concrete subfloor (calcium chloride).
5. ASTM F1482: Installation and preparation of panel-type underlayments for resilient flooring.
6. ASTM E648: Critical radiant flux of floor-covering systems.

7. ASTM E662: Specific optical density of smoke.
8. ASTM F970: Static load limit.
9. ASTM D2047: Static coefficient of friction.

1.3 Preinstallation meeting

1. Before installation, meet with the Architect, Owner, general contractor and flooring installer. Review moisture and pH test results, substrate preparation, seam layout, adhesive selection, acclimation, sequencing with millwork, and protection.

1.4 Action submittals

1. Product data: current LinoFloor xf² product specification, installation instructions, adhesive and weld rod data.
2. Shop drawings: seam layout for each room showing roll direction, seam locations, patterns or insets, and transitions. Keep seams out of doorways and main traffic lanes where possible.
3. Samples: 9" x 9" samples of each selected color showing the pattern range; 12" weld rod in each color.

1.5 Informational submittals

1. Moisture and pH test reports (see Part 3).
2. Installer qualifications.
3. Manufacturer's adhesive bond test results.

1.6 Closeout submittals

1. Maintenance data: Tarkett LinoFloor xf² maintenance instructions, including initial maintenance.
2. Warranty.
3. Extra stock: one full-width piece, 10 lin. ft. minimum, of each color, plus weld rod, from the same production lot as installed material.

1.7 Quality assurance

1. Installer: experienced in linoleum sheet installation and heat welding, with 5 completed linoleum projects of similar scope. Certification by Tarkett or the International Standards & Training Alliance (INSTALL) preferred.
2. Mock-up: install one 6'-6" x 10'-0" area including a heat-welded seam and a transition, in a location chosen by the Architect. Approved mock-up may remain as part of the work.

1.8 Delivery, storage and handling

1. Deliver in original packaging with labels showing color, lot (batch) number and roll number.

2. Store rolls upright in a dry, enclosed space, protected from heat, cold and moisture. Do not stack or crush.
3. Use material from a single production lot in each room; install rolls in sequential order.

1.9 Field conditions

1. Maintain 65–85°F and ambient RH as required by Tarkett for 48 hours before, during and 48 hours after installation, and thereafter maintain the temperature at or above 55°F.
2. Acclimate flooring and adhesive in the installation area for 48 hours minimum.
3. Install after wet work and overhead work are complete and the building is enclosed, with permanent HVAC operating.
4. Expect some "drying room yellowing": a temporary amber cast from linseed oil that fades with exposure to light. This is normal for linoleum and is not a defect.

1.10 Warranty

1. Manufacturer's limited 10-year commercial warranty.
2. Installer's warranty: 2 years from Substantial Completion against seam failure, loss of bond and installation defects.

Part 2 – Products

2.1 Manufacturer

1. Basis of design: Tarkett North America, Solon, Ohio; LinoFloor xf² Veneto (2.5 mm).
2. Comparable products: submit under the substitution procedures in Division 01. Comparable products must be 2.5 mm homogeneous linoleum on jute, meeting ASTM F2034 Type I, with a factory-applied surface treatment and equal performance to 2.2.

2.2 Linoleum sheet flooring

1. Product: Tarkett LinoFloor xf² Veneto.
2. Construction: homogeneous layer of oxidized linseed oil and natural resins mixed with wood flour, limestone and pigments, calendered onto a jute backing. Marbleized pattern runs through the full wear layer.
3. Surface treatment: factory-applied xf² surface protection, requiring no wax or polish.
4. Standard: ASTM F2034, Type I.
5. Thickness: 2.5 mm (0.098").
6. Roll width: 6'-6" (2 m).

7. Performance:
    a. Static load, ASTM F970: 0.005" maximum residual indentation at 150 psi.
    b. Critical radiant flux, ASTM E648: 0.45 W/cm² minimum, Class I.
    c. Smoke density, ASTM E662: 450 or less.
    d. Static coefficient of friction, ASTM D2047: 0.5 minimum.
    e. Chemical resistance, ASTM F925: passes.
    f. Flexibility, ASTM F137: passes.
    g. Heat and light stability, ASTM F1514 and F1515: ΔE less than 8.
8. Indoor air quality: FloorScore certified, compliant with CDPH Standard Method v1.2 (01350).
9. Colors: Match Owner's Sample…..or as selected by the Owner from the manufacturer's full Veneto range.

2.3 Installation materials

1. Adhesive: Tarkett 965 Flooring Adhesive, or the Tarkett adhesive required by the installation instructions for the measured substrate RH and pH.
    a. Science classroom and other wet-use areas: Tarkett 975 two-part polyurethane or 996 two-part epoxy adhesive, per open items.
2. Weld rod: Tarkett linoleum weld rod, color matched to or contrasting with the flooring as selected by the Architect.
3. Patching and leveling compound: Portland cement-based, as recommended by Tarkett for the substrate; gypsum-based compounds are not permitted.
4. Primer: as required by the adhesive and leveling compound manufacturers.
5. Transition strips: Tarkett or rubber reducer and transition strips sized for 2.5 mm flooring, color as selected.

2.4 Base (if selected)

1. Base: per Section 09 65 13.

Part 3 – Execution

3.1 Examination

1. Verify substrates are dry, clean, sound, smooth and free of curing compounds, sealers, paint, old adhesive, oil and other bond-breaking materials.
2. Concrete slabs:

a. Test relative humidity per ASTM F2170 (in situ probes); MVER testing per ASTM F1869 only if required by Tarkett's current instructions. Comply with the moisture limits of the selected adhesive.

b. Test surface pH per ASTM F710; comply with the adhesive's pH limits.

c. Number of tests per ASTM F2170 and F710; locate tests in each room, including near exterior walls and plumbing.

d. Perform an adhesive bond test with the actual flooring and adhesive per Tarkett's instructions.

3. Wood subfloors: verify underlayment panels are installed per ASTM F1482 and Tarkett's instructions, with fasteners set and joints filled flush.

4. Do not start until test results are acceptable. Report unsatisfactory conditions in writing.

3.2 Preparation

1. Remove contaminants mechanically; do not use solvents or adhesive removers.

2. Fill cracks, joints and depressions and level the surface with patching compound to the flatness required by Tarkett.

3. Do not mark substrates or the back of flooring with pens, markers or crayons; they can bleed through linoleum.

4. Vacuum the substrate immediately before adhesive application.

3.3 Installation

1. Install per Tarkett's current LinoFloor xf² sheet installation instructions and the approved seam layout.

2. Cut off factory edges and fit seams tightly. Install rolls in sequence, keeping the same roll direction in each room unless the Architect directs otherwise.

3. Spread adhesive with the notched trowel and at the coverage required by the adhesive manufacturer. Respect open and working times.

4. Roll the flooring in both directions with a 100 lb roller immediately after placement, then again after 30–60 minutes.

5. Scribe neatly to walls, columns, casework and door frames. Undercut door casings.

6. Install transition strips at edges where flooring meets other materials.

3.4 Seams

1. Heat-weld all seams; do not use net-fit (unwelded) seams.

2. Wait until the adhesive has set, at least 24 hours, before welding.
3. Groove seams with a linoleum grooving tool to the depth Tarkett requires, clean, and weld with a hot-air gun and Tarkett linoleum weld rod at Tarkett's recommended temperature and speed.
4. Trim weld rod in two passes, the second after cooling, flush with the surface.

3.5 Cleaning and initial maintenance

1. Remove adhesive from the surface immediately with a cleaner approved by Tarkett.
2. Keep traffic off the floor for 24 hours and rolling loads off for 72 hours, or longer if the adhesive requires.
3. Do not wet-clean for 72 hours after installation. Then perform initial maintenance per Tarkett's LinoFloor xf² maintenance instructions. Do not wax or polish.

3.6 Protection

1. Cover the finished floor with breathable, non-staining protection (such as kraft paper or protective board). Do not use plastic sheeting, which can trap moisture and discolor linoleum.
2. Protect from rolling loads with hardboard panels.
3. Replace damaged material before Substantial Completion.

END OF SECTION 09 65 16

Sources

- Tarkett North America LinoFloor xf² product specification (09/2022)
- Tarkett Veneto xf² (2.5 mm) collection page
- Tarkett linoleum sheet installation instructions (2017)
- TAS Contract LinoFloor xf² listing (certifications)

END OF SECTION 09 65 16

SECTION 09 500 ACOUSTICAL CEILINGS

Beams

From muted hallways to bold, formal offices, Hush Beams come in various lengths, colors, and patterns to fit any design.

PRODUCT SPECIFICATIONS

Composition	100% PET (Polyethylene Terephthalate); 60% recycled material
Thickness	12mm
Product Placement	Ceiling, Hanging
NRC	*NRC values vary depending on Beam spacing and reporting method. Refer to Acoustic Performance graph and table for detailed performance data*
Fire Rating	CAN/ULC-S102 Class A ASTM E84 Class A
Sustainability	100% Recyclable
Warranty	2 Year Limited

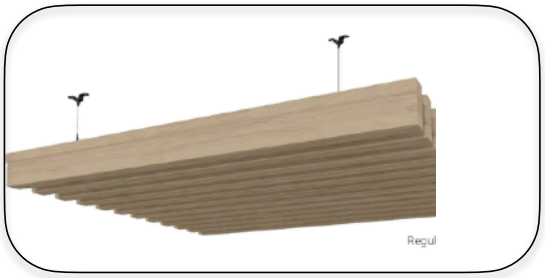

Regul

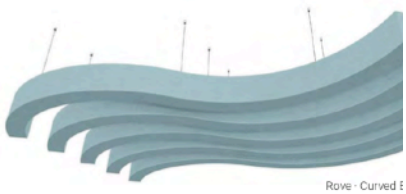

Rove · Curved E

Beams

GREENGUARD® GOLD CERTIFICATION

Hush Acoustics has achieved full GreenGuard® Gold sustainability certification, a mark of excellence that ensures our products meet strict standards for low chemical emissions, promoting healthier indoor air quality.

This recognition gives architects, designers, and consumers confidence in choosing Hush for environmentally responsible solutions. Beyond sustainability, Hush's felt products offer excellent sound-absorbing properties, making them ideal for creating quieter, more comfortable spaces.

SUSTAINABILITY

Manufactured from 100% PET(60% recycled material), our felt products demonstrate our commitment to both environmental stewardship and functional design, contributing to a greener and quieter future. It comprising of flame-retardant fiber as new material ensuring ASTM E84 class A certification. The high strength of PET panels in comparison to its weight is the key to its superior energy efficiency.

FUNGAL RESISTANT

Independently tested by EMSL Canada, Hush P.E.T. felt showed zero mold growth under ASTM C1338 laboratory conditions, confirming exceptional durability.

WARRANTY

2 year limited warranty. See F.A.Q. page on our website for more information.

COMPLIMENTARY DOCUMENTATION

Ceiling Hardware Install Guide

Felt Maintenance Guide

Flame Spread

See Resource Hub page on website for more documentation

REGULAR & ROVE BEAMS

mm	*inches*	*mm*	*inches*
1200 x 50 x 100	47.2 x 2 x 4	1800 x 100 x 150	70.9 x 4 x 5.9
1200 x 50 x 150	47.2 x 2 x 5.9	1800 x 100 x 250	70.9 x 4 x 9.8
1200 x 100 x 150	47.2 x 4 x 5.9	2400 x 50 x 100	94.5 x 2 x 4
1200 x 100 x 250	47.2 x 4 x 9.8	2400 x 50 x 150	94. 5 x 2 x 5.9
1500 x 50 x 100	59.1 x 2 x 4	2400 x 100 x 150	94.5 x 4 x 5.9
1500 x 50 x 150	59.1 x 2 x 5.9	2400 x 100 x 250	94.5 x 4 x 9.8
1500 x 100 x 150	59.1 x 4 x 5.9	2700 x 50 x 100	106.3 x 2 x 4
1500 x 100 x 250	59.1 x 4 x 9.8	2700 x 50 x 150	106.3 x 2 x 5.9
1800 x 50 x 100	70.9 x 2 x 4	2700 x 100 x 150	106.3 x 4 x 5.9
1800 x 50 x 150	70.9 x 2 x 5.9	2700 x 100 x 250	106.3 x 4 x 9.8

* Custom sizes available upon request

Colors: "Crystal" "Ice" "Moss" and "Buttercup"
Buttercup is a Luxe Color



(4) FOUR COLORS NOTED ON DRAWINGS

END OF SECTION 09 500 ACOUSTICAL CEILINGS

SECTION 09912 - PAINTING

1.GENERAL

1. SUMMARY

A. This Section includes surface preparation and field painting of exposed interior items and surfaces.

2. GENERAL DESCRIPTION

A. The design of this project involves considerations for the Baltimore City Green Building Code and the IgCC 2012 Particular attention is required with regard to heating, ventilating, and air conditioning (HVAC) equipment selection and accessories and project commissioning/commissioning procedures. Also, coordination with other project disciplines with regards to materials and procedures is required.

B. This project must conform to the IgCC 2012 Green Building Code. All contractors must become familiar with the requirements of the IgCC 2012 and specifically the requirements for handling of materials, waste, and air quality.

C. All contractors are responsible for reviewing all specification sections associated with this project for detailed descriptions of installation procedures and documentation requirements.

D. All contractors are responsible for familiarizing themselves with the IgCC ScoreCard.

E. Recycled Content Material (RCM)

1. Materials shall be selected to contain the highest possible percentage of post-consumer and/or post-industrial recycled content.

2. Contractor shall submit cut sheets, manufacturer's literature, or other submittal information highlighting the percentage of post-consumer and/or post-industrial recycled content.

3. The Contractor shall submit cost information for the materials cost ONLY for each recycled content item installed in the project.

F. Rapidly renewable Material (RRM)

1. For rapidly renewable building materials specified, Contractor shall provide written documentation from the manufacturer declaring the RRM contained in the final building material (including the percentage of RRM used in a specified product).

2. Contractor shall provide specification, manufacturer's information, and other submittal information highlighting the RRM quantities.

3. Contractor shall provide a cost of the material ONLY for each RRM installed in the project.

G. Low Emitting Sealants and Adhesives

1. All sealants used on the project must meet or exceed Bay Area Quality Management District Reg. 8, Rule 51. This guideline limits VOC content in sealants.

2. All adhesives used on the project must be less than the VOC limits of the South Coast Quality Management District Rule #1168.

3. Contractor shall provide cut sheets and MSDS sheets for each adhesive used highlighting the VOC content.

H. Paints

1. Only interior paints and coatings are included in the LEED criteria. Paints must meet of exceed the VOC and chemical component of Green Seal Requirements.

2. Contractor shall provide cut sheets and MSDS sheets for each paint used on the project, highlighting VOC content.

3. SUBMITTALS

A. Product Data: For each product indicated.

B. Samples: For each type of finish-coat material indicated.

4. QUALITY ASSURANCE

A. Benchmark Samples (Mockups): Provide a full-coat benchmark finish sample for each type of coating and substrate required. Comply with procedures specified in PDCA P5.

1. Wall Surfaces: Provide samples on at least 100 sq. ft. (9 sq. m).
2. Small Areas and Items: Architect will designate items or areas required.
3. Final approval of colors will be from benchmark samples.

5. PROJECT CONDITIONS

A. Store materials not in use in tightly covered containers in a well-ventilated area at a minimum ambient temperature of 45 deg F (7 deg C). Maintain storage containers in a clean condition, free of foreign materials and residue.

B. Apply waterborne paints only when temperatures of surfaces to be painted and surrounding air are between 50 and 90 deg F (10 and 32 deg C).

C. Apply solvent-thinned paints only when temperatures of surfaces to be painted and surrounding air are between 45 and 95 deg F (7 and 35 deg C).

D. Do not apply paint in snow, rain, fog, or mist; or when relative humidity exceeds 85 percent; or at temperatures less than 5 deg F (3 deg C) above the dew point; or to damp or wet surfaces.

6. EXTRA MATERIALS

A. Furnish extra paint materials from the same production run as the materials applied and in the quantities described below. Package with protective covering for storage and identify with labels describing contents. Deliver extra materials to Owner.

1. Quantity: 3 percent, but not less than 1 gal. (3.8 L) or 1 case, as appropriate, of each material and color applied.

2.PRODUCTS

1. MANUFACTURERS

A. Available Products: Subject to compliance with requirements, products that may be incorporated into the Work include, but are not limited to, products listed in other Part 2 articles.

1. Benjamin Moore & Co. (Benjamin Moore).
2. Coronado Paint Company (Coronado).
3. ICI Paint Stores, Inc. (Dulux Paint).
4. Kelly-Moore Paint Co. (Kelly-Moore).
5. M. A. Bruder & Sons, Inc. (M. A. B. Paint).
6. PPG Industries, Inc. (Pittsburgh Paints).
7. Sherwin-Williams Co. (Sherwin-Williams).

2. PAINT MATERIALS, GENERAL

A. Material Compatibility: Provide block fillers, primers, and finish-coat materials that are compatible with one another and with the substrates indicated under conditions of service and application, as demonstrated by manufacturer based on testing and field experience.

B. Material Quality: Provide manufacturer's best-quality paint material of the various coating types specified that are factory formulated and recommended by manufacturer for application indicated. Paint-material containers not displaying manufacturer's product identification will not be acceptable.

C. Colors: As selected from manufacturer's full range.

3. PREPARATORY COATS

A. Concrete Unit Masonry Block Filler: High-performance latex block filler of finish coat manufacturer and recommended in writing by manufacturer for use with finish coat and on substrate indicated.

B. Exterior Primer: Exterior alkyd or latex-based primer of finish coat manufacturer and recommended in writing by manufacturer for use with finish coat and on substrate indicated.

1. Ferrous-Metal and Aluminum Substrates: Rust-inhibitive metal primer.
2. Zinc-Coated Metal Substrates: Galvanized metal primer.
3. Where manufacturer does not recommend a separate primer formulation on substrate indicated, use paint specified for finish coat.

C. Interior Primer: Interior latex-based or alkyd primer of finish coat manufacturer and recommended in writing by manufacturer for use with finish coat and on substrate indicated.

1. Ferrous-Metal Substrates: Quick drying, rust-inhibitive metal primer.
2. Zinc-Coated Metal Substrates: Galvanized metal primer.
3. Where manufacturer does not recommend a separate primer formulation on substrate indicated, use paint specified for finish coat.

4. INTERIOR FINISH COATS

A. Interior Flat Acrylic Paint:

1. Benjamin Moore; Moorecraft Super Spec Latex Flat No. 275.
2. Coronado; 28 Line Super Kote 5000 Latex Flat Paint.
3. Dulux Paint; 1200-XXXX Dulux Professional Velvet Matte Interior Flat Latex Wall & Trim Finish.
4. Kelly-Moore; 450 Pro-Wall Interior Flat Latex Wall Paint.
5. M. A. B. Paint; Fresh Kote Latex Flat 402 Line.
6. Pittsburgh Paints; 6-70 Line SpeedHide Interior Wall Flat-Latex Paint.
7. Sherwin-Williams; ProMar 200 Interior Latex Flat Wall Paint B30W200 Series.

B. Interior Low-Luster Acrylic Enamel:

1. Benjamin Moore; Moorcraft Super Spec Latex Eggshell Enamel No. 274.
2. Coronado; 30-Line Super Kote 5000 Latex Eggshell Enamel.
3. Dulux Paint; 1402-XXXX Dulux Professional Acrylic Eggshell Interior Wall & Trim Enamel.
4. Kelly-Moore; 1610 Sat-N-Sheen Interior Latex Low Sheen Wall and Trim Finish.
5. Kelly-Moore; 1686 Dura-Poxy Eggshell Acrylic Enamel.
6. M. A. B. Paint; Fresh Kote Latex Satin Eggshell Enamel 405 Line.
7. Pittsburgh Paints; 6-400 Series SpeedHide Eggshell Acrylic Latex Enamel.
8. Sherwin-Williams; ProMar 200 Interior Latex Egg-Shell Enamel B20W200 Series.

C. Interior Semigloss Acrylic Enamel:

1. Benjamin Moore; Moorcraft Super Spec Latex Semi-Gloss Enamel No. 276.

2. Coronado; 32-Line Super Kote 5000 Latex Semi-Gloss Enamel.
3. Dulux Paint; 1406-XXXX Dulux Professional Acrylic Semi-Gloss Interior Wall & Trim Enamel.
4. Kelly-Moore; 1649 Acrylic-Latex Semi-Gloss Enamel.
5. Kelly-Moore; 1685 Dura-Poxy Semi-Gloss Acrylic Enamel.
6. M. A. B. Paint; Fresh Kote Latex Semi-Gloss 410 Line.
7. Pittsburgh Paints; 6-500 Series SpeedHide Interior Semi-Gloss Latex.
8. Sherwin-Williams; ProMar 200 Interior Latex Semi-Gloss Enamel B31W200 Series.

D. Interior Full-Gloss Acrylic Enamel:

1. Benjamin Moore; Moore's IMC Acrylic Gloss Enamel No. M28.
2. Coronado; 414 Line Super Kote 5000 Acrylic High Gloss Enamel.
3. Dulux Paint; 3028-XXXX Dulux Interior/Exterior Acrylic Gloss Finish.
4. Kelly-Moore; 1680 Dura-Poxy Gloss Acrylic Enamel.
5. M. A. B. Paint; Rich Lux Architectural High Gloss Latex Enamel 022-127 Line.
6. Pittsburgh Paints; 6-8534 SpeedHide Interior Latex 100 Percent Acrylic Gloss Enamels.
7. Pittsburgh Paints; 90-374 Pitt-Tech One Pack Interior/Exterior High Performance Waterborne High Gloss DTM Industrial Enamel.
8. Sherwin-Williams; ProMar 200 Interior Latex Gloss Enamel B21W201.

5. INTERIOR WOOD STAINS AND VARNISHES

A. Open-Grain Wood Filler:

1. Benjamin Moore; Benwood Paste Wood Filler No. 238.
2. Coronado; none required.
3. Dulux Paint; none required.
4. Kelly-Moore; none required.
5. M. A. B. Paint; Paste Wood Filler.
6. Pittsburgh Paints; none required.
7. Sherwin-Williams; Sher-Wood Fast-Dry Filler.
8. Sherwin-Williams; none recommended.

B. Interior Wood Stain: Alkyd based.

1. Benjamin Moore; Benwood Penetrating Stain No. 234.
2. Coronado; 3601-Line Quick-Seal Alkyd Stain.
3. Dulux Paint; 1700-XXX WoodPride Interior Solventborne Wood Finishing Stain.
4. Kelly-Moore; McCloskey Stain.
5. M. A. B. Paint; Wood Stain 062 Line.
6. Pittsburgh Paints; 77-560 Rez Interior Semi-Transparent Oil Stain.
7. Sherwin-Williams; Wood Classics Interior Oil Stain A-48 Series.

C. Clear Sanding Sealer: Fast-drying alkyd based.

1. Benjamin Moore; Moore's Interior Wood Finishes Quick-Dry Sanding Sealer No. 413.
2. Coronado; 81-10 Dual Seal.
3. Dulux Paint; 1902-0000 WoodPride Interior Satin Polyurethane Varnish.
4. Kelly-Moore; 2164 E Z Sand Alkyd Q. D. Sealer.
5. M. A. B. Paint; Minit Dri Sanding Sealer 037-005 Line.
6. Pittsburgh Paints; 6-10 SpeedHide Quick-Drying Interior Sanding Wood Sealer and Finish.
7. Sherwin-Williams; Wood Classics Fast Dry Sanding Sealer B26V43.

D. Interior Alkyd- or Polyurethane-Based Clear Satin Varnish:

1. Benjamin Moore; Benwood Interior Wood Finishes Polyurethane Finishes Low Lustre No. 435.
2. Coronado; 67-100 Polyurethane Liquid Plastic Satin Varnish.
3. Dulux Paint; 1902-0000 WoodPride Interior Satin Polyurethane Varnish.
4. Kelly-Moore; 2050 Kel–Aqua Stain Base.
5. M. A. B. Paint; Rich Lux Water Based Satin Polyurethane.
6. Pittsburgh Paints; 77-7 Rez Varnish, Interior Satin Oil Clear.
7. Sherwin-Williams; Wood Classics Fast Dry Oil Varnish, Satin A66-300 Series.

E. Interior Waterborne Clear Satin Varnish: Acrylic-based polyurethane.

1. Benjamin Moore; Stays Clear Acrylic Polyurethane No. 423, Satin.
2. Coronado; 70-10 Aqua-Plastic Urethane Clear Satin.
3. Dulux Paint; 1802-0000 WoodPride Interior Waterborne Aquacrylic Satin Varnish.
4. Kelly-Moore; 2097 Kel-Thane II Clear Acrylic Urethane–Satin.
5. M. A. B. Paint; Rich Lux Water Based Satin Polyurethane 088-900s.
6. Pittsburgh Paints; 77-49 Rez Satin Acrylic Clear Polyurethane.
7. Sherwin-Williams; Wood Classics Waterborne Polyurethane Satin, A68 Series.

F. Interior Waterborne Clear Gloss Varnish: Acrylic-based polyurethane.

1. Benjamin Moore; Benwood Interior Wood Finishes Polyurethane Finishes High Gloss No. 428.
2. Coronado; 70-10 Aqua-Plastic Urethane Clear Gloss.
3. Dulux Paint; 1808-0000 WoodPride Interior Waterborne Aquacrylic Gloss Varnish.
4. Kelly-Moore; 2096 Kel-Thane II Clear Acrylic Urethane–Gloss.
5. M. A. B. Paint; Rich Lux Water Based Gloss Polyurethane 088-899 Line.
6. Pittsburgh Paints; 77-45 Rez Full-Gloss Acrylic Clear Polyurethane.
7. Sherwin-Williams; Wood Classics Waterborne Polyurethane Gloss, A68 Series.

G. Paste Wax: As recommended by manufacturer.

3.EXECUTION

1. APPLICATION

A. Comply with procedures specified in PDCA P4 for inspection and acceptance of surfaces to be painted.

B. Coordination of Work: Review other Sections in which primers are provided to ensure compatibility of the total system for various substrates. On request, furnish information on characteristics of finish materials to ensure use of compatible primers.

C. Remove hardware and hardware accessories, plates, machined surfaces, lighting fixtures, and similar items already installed that are not to be painted. If removal is impractical or impossible because of size or weight of the item, provide surface-applied protection before surface preparation and painting.

1. After completing painting operations in each space or area, reinstall items removed using workers skilled in the trades involved.

D. Surface Preparation: Clean and prepare surfaces to be painted according to manufacturer's written instructions for each particular substrate condition and as specified.

1. Provide barrier coats over incompatible primers or remove and reprime.
2. Cementitious Materials: Remove efflorescence, chalk, dust, dirt, grease, oils, and release agents. Roughen as required to remove glaze. If hardeners or sealers have been used to improve curing, use mechanical methods of surface preparation.
3. Wood: Clean surfaces of dirt, oil, and other foreign substances with scrapers, mineral spirits, and sandpaper, as required. Sand surfaces exposed to view smooth and dust off.

    a. Scrape and clean small, dry, seasoned knots, and apply a thin coat of white shellac or other recommended knot sealer before applying primer. After priming, fill holes and imperfections in finish surfaces with putty or plastic wood filler. Sand smooth when dried.
    b. Prime, stain, or seal wood to be painted immediately on delivery. Prime edges, ends, faces, undersides, and back sides of wood, including cabinets, counters, cases, and paneling.
    c. If transparent finish is required, backprime with spar varnish.
    d. Backprime paneling on interior partitions where masonry, plaster, or other wet wall construction occurs on back side.
    e. Seal tops, bottoms, and cutouts of unprimed wood doors with a heavy coat of varnish or sealer immediately on delivery.

4. Ferrous Metals: Clean ungalvanized ferrous-metal surfaces that have not been shop coated; remove oil, grease, dirt, loose mill scale, and other foreign substances. Use solvent or mechanical cleaning methods that comply with SSPC's recommendations.

    a. Blast steel surfaces clean as recommended by paint system manufacturer and according to SSPC-SP 6/NACE No. 3.
    b. Treat bare and sandblasted or pickled clean metal with a metal treatment wash coat before priming.
    c. Touch up bare areas and shop-applied prime coats that have been damaged. Wire-brush, clean with solvents recommended by paint manufacturer, and touch up with same primer as the shop coat.

5. Galvanized Surfaces: Clean galvanized surfaces with nonpetroleum-based solvents so surface is free of oil and surface contaminants. Remove pretreatment from galvanized sheet metal fabricated from coil stock by mechanical methods.

E. Material Preparation:

1. Maintain containers used in mixing and applying paint in a clean condition, free of foreign materials and residue.
2. Stir material before application to produce a mixture of uniform density. Stir as required during application. Do not stir surface film into material. If necessary, remove surface film and strain material before using.

F. Exposed Surfaces: Include areas visible when permanent or built-in fixtures, grilles, convector covers, covers for finned-tube radiation, and similar components are in place. Extend coatings in these areas, as required, to maintain system integrity and provide desired protection.

1. Paint surfaces behind movable equipment and furniture the same as similar exposed surfaces. Before final installation of equipment, paint surfaces behind permanently fixed equipment or furniture with prime coat only.
2. Paint interior surfaces of ducts with a flat, nonspecular black paint where visible through registers or grilles.
3. Paint back sides of access panels and removable or hinged covers to match exposed surfaces.
4. Finish exterior doors on tops, bottoms, and side edges the same as exterior faces.
5. Finish interior of wall and base cabinets and similar field-finished casework to match exterior.

G. Sand lightly between each succeeding enamel or varnish coat.

H. Scheduling Painting: Apply first coat to surfaces that have been cleaned, pretreated, or otherwise prepared for painting as soon as practicable after preparation and before subsequent surface deterioration.

1. Omit primer over metal surfaces that have been shop primed and touchup painted.
2. If undercoats, stains, or other conditions show through final coat of paint, apply additional coats until paint film is of uniform finish, color, and appearance.

I. Application Procedures: Apply paints and coatings by brush, roller, spray, or other applicators according to manufacturer's written instructions.

J. Minimum Coating Thickness: Apply paint materials no thinner than manufacturer's recommended spreading rate. Provide total dry film thickness of the entire system as recommended by manufacturer.

K. Mechanical and Electrical Work: Painting of mechanical and electrical work is limited to items exposed in equipment rooms and occupied spaces.

L. Block Fillers: Apply block fillers to concrete masonry block at a rate to ensure complete coverage with pores filled.

M. Prime Coats: Before applying finish coats, apply a prime coat, as recommended by manufacturer, to material that is required to be painted or finished and that has not been prime coated by others. Recoat primed and sealed surfaces where evidence of suction spots or unsealed areas in first coat appears, to ensure a finish coat with no burn-through or other defects due to insufficient sealing.

N. Pigmented (Opaque) Finishes: Completely cover surfaces as necessary to provide a smooth, opaque surface of uniform finish, color, appearance, and coverage. Cloudiness, spotting, holidays, laps, brush marks, runs, sags, ropiness, or other surface imperfections will not be acceptable.

O. Transparent (Clear) Finishes: Use multiple coats to produce a glass-smooth surface film of even luster. Provide a finish free of laps, runs, cloudiness, color irregularity, brush marks, orange peel, nail holes, or other surface imperfections.

P. Stipple Enamel Finish: Roll and redistribute paint to an even and fine texture. Leave no evidence of rolling, such as laps, irregularity in texture, skid marks, or other surface imperfections.

2. CLEANING AND PROTECTING

A. At the end of each workday, remove empty cans, rags, rubbish, and other discarded paint materials from Project site.

B. Protect work of other trades, whether being painted or not, against damage from painting. Correct damage by cleaning, repairing or replacing, and repainting, as approved by Architect.

C. Provide "Wet Paint" signs to protect newly painted finishes. After completing painting operations, remove temporary protective wrappings provided by others to protect their work.

1. After work of other trades is complete, touch up and restore damaged or defaced painted surfaces. Comply with procedures specified in PDCA P1.

3. EXTERIOR PAINT SCHEDULE

A. Concrete, Stucco, and Masonry (Other Than Concrete Unit Masonry):

1. Acrylic Finish: Two finish coats over a primer.

a. Primer: Exterior concrete and masonry primer.
b. Finish Coats: Exterior full-gloss acrylic enamel for concrete, masonry, and wood.

B. Concrete Unit Masonry:

1. Acrylic Finish: Two finish coats over a block filler.

a. Block Filler: Concrete unit masonry block filler.
b. Finish Coats: Exterior full-gloss acrylic enamel for concrete, masonry, and wood.

4. INTERIOR PAINT SCHEDULE

A. Concrete and Masonry (Other Than Concrete Unit Masonry):

1. Acrylic Finish: Two finish coats over a primer.

a. Primer: Interior concrete and masonry primer.
b. Finish Coats: Interior low-luster acrylic enamel.

2. Alkyd-Enamel Finish: Two finish coats over a primer.

a. Primer: Interior concrete and masonry primer.
b. Finish Coats: Interior semigloss alkyd enamel.

B. Concrete Unit Masonry:

1. Acrylic Finish: Two finish coats over a block filler.

a. Block Filler: Concrete unit masonry block filler.
b. Finish Coats: Interior low-luster acrylic enamel.

2. Alkyd-Enamel Finish: Two finish coats over a filled surface.

    a. Block Filler: Concrete unit masonry block filler.
    b. Finish Coat: Interior semigloss alkyd enamel.

C. Mineral-Fiber-Reinforced Cement Panels:

1. Flat Acrylic Finish: Two finish coats.

    a. Finish Coats: Interior flat acrylic paint.

D. Gypsum Board:

1. Acrylic Finish: Two finish coats over a primer.

    a. Primer: Interior gypsum board primer.
    b. Finish Coats: Interior low-luster acrylic enamel.

2. Alkyd-Enamel Finish: Two finish coats over a primer.

    a. Primer: Interior gypsum board primer.
    b. Finish Coats: Interior semigloss alkyd enamel.

E. Ferrous Metal:

1. Acrylic Finish: Two finish coats over a primer.

    a. Primer: Interior ferrous-metal primer.
    b. Finish Coats: Interior low-luster acrylic enamel.

2. Alkyd-Enamel Finish: Two finish coats over a primer.

    a. Primer: Interior ferrous-metal primer.
    b. Finish Coats: Interior semigloss alkyd enamel.

F. Zinc-Coated Metal:

1. Acrylic Finish: Two finish coats over a primer.

    a. Primer: Interior zinc-coated metal primer.
    b. Finish Coats: Interior low-luster acrylic enamel

2. Alkyd-Enamel Finish: Two finish coats over a primer.

    a. Primer: Interior zinc-coated metal primer.
    b. Finish Coats: Interior semigloss alkyd enamel

G. All-Service Jacket over Insulation:

1. Acrylic Finish: Two finish coats. Add fungicidal agent to render fabric mildew proof.

    a. Finish Coats: Interior flat latex-emulsion size.

5. INTERIOR STAIN AND NATURAL-FINISH WOODWORK SCHEDULE

A. Stain-Varnish Finish: Two finish coats of varnish over a sealer coat and interior wood stain. Wipe wood filler before applying stain.

1. Filler Coat: Open-grain wood filler.
2. Stain Coat: Interior wood stain.
3. Sealer Coat: Clear sanding sealer.
4. Finish Coats: Interior alkyd- or polyurethane-based clear satin varnish.

B. Natural-Varnish Finish: Two finish coats of varnish over a sealer coat and a filler coat.

1. Filler Coat: Open-grain wood filler.
2. Sealer Coat: Clear sanding sealer.
3. Finish Coats: Interior alkyd- or polyurethane-based clear satin varnish.

C. Wax-Polished Finish: Three finish coats of paste wax over a sealer coat and alkyd-based interior wood stain.

1. Stain Coat: Interior wood stain.
2. Sealer Coat: Clear sanding sealer.
3. Finish Coats: Paste wax.

END OF SECTION 09912

SECTION 12 241 - ROLLER WINDOW SHADES

PART 1 - GENERAL

1.1 RELATED DOCUMENTS

A. Drawings and general provisions of the Contract, including General and Supplementary Conditions and Division 01 Specification Sections, apply to this Section.

1.2 SUMMARY

A. Section Includes:

1. Manual-operated roller shades with double rollers [Windows in Library]
2. Manual-operated roller shades with double rollers [Windows in Science Room]

1.3 3. Motor-operated roller shades with single rollers. [High windows in Library]

1.4 ACTION SUBMITTALS

A. Product Data: For each type of product.
1. Include styles, material descriptions, construction details, dimensions of individual components and profiles, features, finishes, and operating instructions for roller shades.

B. Shop Drawings: Show fabrication and installation details for roller shades, including fabric panel materials, their orientation to rollers, and their seam and batten locations.
1. Motor-Operated Shades: Include details of installation and diagrams for power, signal, and control wiring.
2. Manual Operated Shades

C. Samples: For each exposed product and for each color and texture specified, 10 inches (250 mm) long.

1.5 INFORMATIONAL SUBMITTALS

A. Qualification Data: For Installer.

B. Product Certificates: For each type of fabric panel material, signed by product manufacturer.

C. Product Test Reports: For each type of fabric panel material, for tests performed by manufacturer and witnessed by a qualified testing agency.

1.6 CLOSEOUT SUBMITTALS

A. Maintenance Data: For roller shades to include in maintenance manuals.

1.7 N/A

1.8 QUALITY ASSURANCE

A. Manufacturer Qualifications:

1. A firm with at least 20 years of demonstrated experience in United States-based manufacture of the products required in this Section.
2. A firm with the capability to use both knife cutting and ultrasonic cutting in the manufacture of the products required in this Section.
3. A firm with the capability to digitally print on shade panels.

B. Installer Qualifications: Fabricator of products.

1.9 DELIVERY, STORAGE, AND HANDLING

A. Deliver roller shades in factory packages, marked with manufacturer, product name, and location of installation using same designations indicated on Drawings.

1.10 FIELD CONDITIONS

A. Environmental Limitations: Do not install roller shades until construction and finish work in spaces, including painting, is complete and dry and ambient temperature and humidity conditions are maintained at the levels indicated for Project when occupied for its intended use.

B. Field Measurements: Where roller shades are indicated to fit to other construction, verify dimensions of other construction by field measurements before fabrication and indicate measurements on Shop Drawings. Allow clearances for operating hardware of operable glazed units through entire operating range. Notify Architect of installation conditions that vary from Drawings. Coordinate fabrication schedule with construction progress to avoid delaying the Work.

PART 2 - PRODUCTS

2.1 MANUFACTURERS

A. Basis-of-Design Product: Subject to compliance with requirements, provideAcceptable Manufacturer for Window Shade Control System as basis of design, performance and warranty: Mecho, which is located at: 4203 35th St.; Long Island City, NY 11101; Tel: 718-729-2020; Email: marketing@mechoshade.com;

B. Source Limitations: Obtain roller shades from single source from single manufacturer.

2.2 ROLLER SHADE SCHEDULE:

1. Shade Type 1: Manual operating, chain drive, sunscreen roller and room darkening opaque double roller shades and related motor control systems, mounting systems and accessories
2. Shade Type 2: Motor operating room darkening single roller shades and related motor control systems, mounting systems and accessories as indicated on drawings.

2.3 MOTOR-OPERATED, SINGLE-ROLLER SHADES

A. Motorized Operating System: Provide factory-assembled, shade-operator system of size and capacity and with features, characteristics, and accessories suitable for conditions indicated, complete with electric motor and factory-prewired motor controls, power disconnect switch, enclosures protecting controls and operating parts, and accessories required for reliable operation without malfunction. Include wiring from motor controls to motors. Coordinate operator wiring requirements and electrical characteristics with building electrical system.

1. Electrical Components: Listed and labeled as defined in NFPA 70, by a qualified testing agency, and marked for intended location and application.
2. Electric Motor: Manufacturer's standard tubular, enclosed in roller.
    a. Electrical Characteristics: Single phase, [24] [110] [220] V, 60 Hz.
3. Remote Control: Electric controls with NEMA ICS 6, Type 1 enclosure for surface mounting. Provide the following for remote-control activation of shades:

    a. Wireless Control: System consisting of a concealed wireless 433 MHz radio receiver built into motor with no external components. Provide wireless wall switches for groups of shades, to open and close shades simultaneously, and to stop shade movement.
    b. Color: As selected by Architect from manufacturer's full range.
4. Limit Switches: Adjustable switches interlocked with motor controls and set to stop shades automatically at fully raised and fully lowered positions.
5. Operating Features:
    a. Group switching with integrated switch control; single faceplate for multiple switch cutouts.
6. Accessories:
    a. N/A

B. Rollers: Corrosion-resistant steel or extruded-aluminum tubes of diameters and wall thicknesses required to accommodate operating mechanisms and weights and widths of fabric panels indicated without deflection. Provide with permanently lubricated drive-end assemblies and idle-end assemblies designed to facilitate removal of fabric panels for service.

1. Roller Drive-End Location: Right side of inside face of shade.
2. Direction of Fabric Panel Roll: Reverse, from front of roller.
3. Fabric Panel-to-Roller Attachment: Manufacturer's standard method.
    a. Provide fabric panels not less than 12 inches (300 mm) longer than desired shade height to assure solid attachment to roller tube and ability to adjust panels in field without removing mounting brackets.

C. Mounting Hardware: Brackets or endcaps, corrosion resistant and compatible with roller assembly, operating mechanism, installation accessories, and mounting location and conditions indicated.

1. Fabric Panel Material: Light-blocking fabric.
2. Fabric Panel Bottom (Hem) Bar: Enclosed in hem pocket of fabric panel material, thermally sealed, not sewn.
    a. Bottom (Sill) Channel: With light seals and designed to eliminate light gaps at bottoms of shades when shades are closed
    b. Color and Finish: As selected by Architect from manufacturer's full range.

F. Installation Accessories:
1. Front Fascia: Aluminum extrusion that conceals front and underside of roller and operating mechanism and attaches to roller endcaps without exposed fasteners.
a. Shape: L-shaped.
b. Height: Manufacturer's standard height required to conceal roller and fabric panel when shade is fully open, but not less than 3 inches (76 mm).
c. Color: Black
2. Reverse Roll Fascia: Aluminum extrusion that conceals front and top side of roller and operating mechanism and attaches to roller endcaps.
a. Shape: L-shaped.
b. Height: Manufacturer's standard height required to conceal roller and fabric panel when shade is fully open, but not less than 4 inches (102 mm).
c. Color: White.
3. Exposed Headbox: Rectangular, extruded-aluminum enclosure including front fascia, top and back covers, endcaps, and removable bottom closure.
a. Height: Manufacturer's standard in height required to enclose roller and fabric panel when shade is fully open, but not less than 4 inches (102 mm).
4. Endcap Covers: To cover exposed endcaps.
8. Bottom (Sill) Channel: With light seals and designed to eliminate light gaps at bottoms of shades when shades are closed.
9. Installation Accessories Color and Finish: As selected from manufacturer's full range.

2.8 ROLLER-SHADE FABRICATION
A. Product Safety Standard: Fabricate roller shades to comply with WCMA A 100.1, including requirements for flexible, chain-loop devices; lead content of components; and warning labels.
B. Unit Sizes: Fabricate units in sizes to fill window and other openings as follows, measured at 74 deg F (23 deg C):
1. Between (Inside) Jamb Installation: Width equal to jamb-to-jamb dimension of opening in which shade is installed less 1/4 inch (6 mm) per side or 1/2-inch (13-mm) total, plus or minus 1/8 inch (3.1 mm). Length equal to head-to-sill or -floor dimension of opening in which shade is installed less 1/4 inch (6 mm), plus or minus 1/8 inch (3.1 mm).
C. Fabric Panel Fabrication: Fabricate fabric panels without battens or seams to extent possible except as follows:
1. Vertical Shades: Where width-to-length ratio of fabric panel is equal to or greater than 1:4, provide battens and seams at uniform spacings along fabric panel length to ensure fabric panel tracking and alignment through its full range of movement without distortion of the material.

2. Railroaded Materials: Railroad material where material roll width is less than the required width of fabric panel and where indicated. Provide seams as required by railroaded material to produce fabric panels with full roll-width panel(s) plus, if required, one partial roll-width panel located at top of fabric panel.

PART 3 - EXECUTION

3.1 EXAMINATION

A. Examine substrates, areas, and conditions, with Installer present, for compliance with requirements for installation tolerances, operational clearances, accurate locations of connections to building electrical system, and other conditions affecting performance of the Work.

B. Proceed with installation only after unsatisfactory conditions have been corrected.

3.2 ROLLER-SHADE INSTALLATION

A. Install roller shades level, plumb, and aligned with adjacent units according to manufacturer's written instructions.

1. Opaque Fabric Panels: Located so fabric panel is not closer than 2 inches (51 mm) to interior face of glass. Allow clearances for window operation hardware.

B. Electrical Connections: Connect motor-operated roller shades to building electrical system.

3.3 ADJUSTING

A. Adjust and balance roller shades to operate smoothly, easily, safely, and free from binding or malfunction throughout entire operational range.

3.4 CLEANING AND PROTECTION

A. Clean roller-shade surfaces after installation, according to manufacturer's written instructions.

B. Provide final protection and maintain conditions, in a manner acceptable to manufacturer and Installer, that ensure that roller shades are without damage or deterioration at time of Substantial Completion.

C. Replace damaged roller shades that cannot be repaired, in a manner approved by Architect, before time of Substantial Completion.

3.5 DEMONSTRATION

A. Engage a factory-authorized service representative to train Owner's maintenance personnel to adjust, operate, and maintain motor-operated roller shades.

END OF SECTION 12 24 13

SECTION 12 356 - CASEWORK AND SOLID SURFACE COUNTERTOPS
GENERAL

SUMMARY

This Section includes wood cabinets and countertops.

SUBMITTALS

Product Data: For cabinets, countertop material, and cabinet hardware.

Shop Drawings: Include plans and elevations. Show materials, finishes, filler panels, hardware, countertop edge and backsplash profiles, cutouts for plumbing fixtures, and methods of joining countertops.

Cabinets: Verify dimensions of installation areas by field measurements before fabrication and indicate measurements on Shop Drawings. Show fillers and scribes if necessary.

Countertops: Verify dimensions of countertops by field measurements after base cabinets are installed but before countertop fabrication is complete.

Samples: For each exposed finish.

QUALITY ASSURANCE

Quality Standards:

Cabinets: KCMA A161.1.

KCMA Certification: Provide cabinets with KCMA's "Certified Cabinet" seal affixed in a semiexposed location of each unit and showing compliance with the above standard.

PRODUCTS

COLORS, TEXTURES, AND PATTERNS

Colors, Textures, and Patterns: Match architect's sample.

CABINET MATERIALS

Exposed Materials:

Exposed Wood Species: Natural Oak. Do not use two adjacent exposed faces that are noticeably dissimilar in color, grain, figure, or natural character markings.

Solid Wood: Clear hardwood lumber of species indicated, free of defects, selected for compatible grain and color, and kiln dried to 7 percent moisture content.

Plywood: Hardwood plywood complying with HPVA HP-1 with face veneer of species indicated, selected for compatible color and grain with Grade A faces.

Semiexposed Materials: Unless otherwise indicated, provide the following:

Solid Wood: Natural Oak.

ConcealEd Materials:
Solid Wood: Natural Oak.

COUNTERTOP MATERIALS

Particleboard: ANSI A208.1, Grade M-2.
Plywood: Exterior softwood plywood complying with PS 1, Grade C-C Plugged, touch sanded.
Solid-Surfacing Material: Homogeneous solid sheets of filled plastic resin complying with material and performance requirements of ANSI Z124.3, Type 5 or Type 6, without a precoated finish.

Manufacturer:
Color and Pattern: As indicated on drawings

CASEWORK HARDWARE

General: Complying with BHMA A156.9, of type, material, size, and finish as selected from manufacturer's standard choices.
Drawer Guides: Epoxy-coated-metal, self-closing drawer guides; designed to prevent rebound when drawers are closed; with nylon-tired, ball-bearing rollers; and complying with BHMA A156.9, Type B05091.

CABINET CONSTRUCTION

Face Style: Flush overlay; door and drawer faces cover cabinet body members or face frames.
Face Frames: Frameless [3/4-by-1-5/8-inch (19-by-41-mm) solid wood.
Door and Drawer Fronts: 1/2-inch- (12.7-mm-) thick, solid wood.

SOLID-SURFACING-MATERIAL COUNTERTOPS

Configuration: Fabricate countertops with the following front and backsplash style:
Front: Straight, slightly eased at top.
Construction: 3/4-inch- (19-mm-) thick, solid-surfacing-material countertops and backsplashes.

INSTALLATION

Install casework without variations in plane of adjoining surfaces; use concealed shims. Where casework abuts other finished work, scribe and cut for accurate fit. Provide filler strips, scribe strips, and moldings in finish to match casework face.
Install casework and countertop level and plumb to a tolerance of 1/8 inch in 8 feet (3 mm in 2.4 m).
Fasten cabinets to adjacent units and to backing.
Fasten wall cabinets through back, near top and bottom, at ends and not less than 24 inches (600 mm) o.c.

Fasten plastic-laminate countertops by screwing through corner blocks of base units into underside of countertop. Form seams using splines to align adjacent surfaces, and secure with glue and concealed clamping devices designed for this purpose.

Fasten solid-surface countertops by screwing through corner blocks of base units into underside of countertop. Align adjacent surfaces, and form seams to comply with manufacturer's written instructions using adhesive in color to match countertop. Carefully dress joints smooth, remove surface scratches, and clean entire surface.

Adjust casework and hardware so doors and drawers are centered in openings and operate smoothly without warp or bind. Lubricate operating hardware as recommended by manufacturer.

END OF SECTION 12 356

SECTION 11 132 - PROJECTION SCREENS

GENERAL

SUMMARY

This Section includes front-projection screens.

SUBMITTALS

Product Data: For each type of screen indicated.

Manually Operated Units:

Shop Drawings: Show location of screen centerline relative to ends of screen case, location of seams in viewing surfaces, connections to suspension systems for pendant- and recess-mounted screens, anchorage details, and accessories.

PRODUCTS

MANUFACTURERS

In other Part 2 articles where subparagraph titles below introduce lists, the following requirements apply for product selection:

Products: Subject to compliance with requirements, provide the product specified.

FRONT-PROJECTION SCREENS

Material and Viewing Surface of Front-Projection Screens: Screens manufactured from mildew- and flame-resistant fabric with reflective viewing surface, matte silver, silver lenticular, pearlescent, or high-gain matte neutral.

Gain Characteristics: Peak gain of 1.3 to 1.5, and half-gain angle of at least 35 deg rees.

Products:

Da-Lite Screen Co., Inc. or approved equal

Seams: Where length of screen exceeds maximum length produced without seams, provide screen with horizontal seam between extra drop length and viewing surface.

Seamless Construction: Provide screens without seams.

Edge Treatment: Black masking borders.

EXECUTION

INSTALLATION

Install front-projection screens with screen cases in position and relationship to adjoining construction indicated. Securely anchor to supporting substrate in a manner that produces a smoothly operating screen with vertical edges plumb and viewing surface flat when screen is lowered.

Install factory-framed, rear-projection screens in prepared wall openings. Securely anchor frames to surrounding construction so frames are level and plumb and screen surfaces are flat.

END OF SECTION 11 132

SECTION 08 211 - FLUSH WOOD DOORS

GENERAL

SUMMARY

This Section includes solid core doors as follows:

Doors with factory finished wood-veneer faces.

SUBMITTALS

Product Data: For each type of door.

Shop Drawings: Indicate location, size, and hand of each door; elevation of each kind of door; construction details; location and extent of hardware blocking; mortises, holes, and cutouts; requirements for veneer matching; fire ratings; and other pertinent data.

Samples: For each face material and finish.

QUALITY ASSURANCE

Quality Standard: Comply with NWWDA I.S.1-A, "Architectural Wood Flush Doors."

Fire-Rated Wood Doors: Doors that are listed and labeled by a testing and inspecting agency acceptable to authorities having jurisdiction, for fire ratings indicated.

Test Pressure: Test at atmospheric pressure.

PRODUCTS

MANUFACTURERS

Manufacturers: Subject to compliance with requirements, provide products by one of the following:

Algoma Hardwoods Inc.
Ampco Products, Inc.
Buell Door Company.
Chappell Door Co.
Eagle Plywood & Door Manufacturing, Inc.
Eggers Industries; Architectural Door Division.
GRAHAM Manufacturing Corp.
Haley Brothers, Inc.
Ideal Wood Products, Inc.
IPIK Door Company.
Lambton Doors.
Marlite.
Mohawk Flush Doors, Inc.
Oshkosh Architectural Door Co.
Poncraft Door Co.
Southwood Door Co.
Vancouver Door Company, Inc.

VT Industries Inc.
Weyerhaeuser Company.

DOOR CONSTRUCTION

Doors for Transparent Finish:
Grade: Premium, with Grade AA faces.
Species and Cut: Red Oak rotary cut.
Match between Veneer Leaves: Book match.
Assembly of Veneer Leaves on Door Faces: Balance match.
Pair and Set Match: Provide for doors hung in same opening or separated only by mullions.

Interior Veneer-Faced Solid-Core Doors:
Core: Glued block.
Construction: Five plies with stiles and rails bonded to core, then entire unit abrasive planed before veneering.

Fire-Rated Doors:
Construction: Construction and core specified above for type of face indicated or manufacturer's standard mineral-core construction as needed to provide fire rating indicated.
Edge Construction: Manufacturer's standard laminated-edge construction with improved screw-holding capability and split resistance.
Edge Construction: Intumescent seals concealed by outer stile matching face veneer, and laminated backing for improved screw-holding capability and split resistance.
Pairs: Furnish formed-steel edges and astragals for pairs of fire-rated doors, unless otherwise indicated.
Pairs: Provide fire-rated pairs with fire-retardant stiles matching face veneer that are labeled and listed for kinds of applications indicated without formed-steel edges and astragals. Provide stiles with concealed intumescent seals.

FABRICATION

Fabricate doors in sizes indicated for Project-site fitting.
Factory fit doors to suit frame-opening sizes indicated. Comply with clearance requirements of referenced quality standard for fitting. Comply with requirements in NFPA 80 for fire-rated doors.
Factory machine doors for hardware that is not surface applied.

Metal Astragals: Premachine astragals and formed-steel edges for hardware for pairs of fire-rated doors.

Openings: Cut and trim openings through doors to comply with applicable requirements of referenced standards for kind(s) of door(s) required.

Louvers: Factory install louvers in prepared openings.

DOORS FOR STAINED FINISH

FACTORY FINISHING

General: Finish doors at factory that are indicated to receive transparent finish.
Grade: Premium.

Finish: Manufacturer's standard finish with performance comparable to AWI System TR-6 catalyzed polyurethane.
Staining: Match sample.
Effect: Open-grain finish.
Sheen: Satin.

EXECUTION

INSTALLATION

Install doors to comply with manufacturer's written instructions, referenced quality standard, and as indicated.
Install fire-rated doors in corresponding fire-rated frames according to NFPA 80.
Job-Fitted Doors: Align and fit doors in frames with uniform clearances and bevels; do not trim stiles and rails in excess of limits set by manufacturer or permitted for fire-rated doors. Machine doors for hardware. Seal cut surfaces after fitting and machining.
Comply with NFPA 80 for fire-rated doors.
Factory-Fitted Doors: Align in frames for uniform clearance at each edge.
Factory-Finished Doors: Restore finish before installation if fitting or machining is required at Project site.

END OF SECTION 08211

SECTION 08212 - STILE AND RAIL WOOD DOORS

GENERAL

SUMMARY

This Section includes interior stile and rail wood doors.

See Division 8 Section "Glazing" for glass view panels in stile and rail wood doors.

SUBMITTALS

Product Data: For each type of door indicated.

Shop Drawings: Indicate location, size, and hand of each door; fire ratings; construction details for stiles, rails, panels, and moldings (sticking); mortises, holes, and cutouts; and other pertinent data.

Samples: For each face material and finish.

QUALITY ASSURANCE

NWWDA Quality Standard: NWWDA I.S.6, "Industry Standard for Stile and Rail Doors."

AWI Quality Standard: AWI's "Architectural Woodwork Quality Standards" for grade of door, core, construction, finish, and other requirements.

WIC Quality Standard: WIC's "Manual of Millwork" for grade of door, core, construction, finish, and other requirements.

Fire-Rated Wood Doors: Doors that are listed and labeled by a testing and inspecting agency acceptable to authorities having jurisdiction.

Safety Glass: Provide products complying with ANSI Z97.1 and testing requirements in 16 CFR 1201, for Category II materials, unless those of Category I are expressly indicated and permitted.

PRODUCTS

STILE AND RAIL DOORS OF STOCK DESIGN AND CONSTRUCTION

Manufacturers: Subject to compliance with requirements, provide products by one of the following:

Eggers Industries; Architectural Door Division.
Jeld-Wen, Inc.
Louisiana Pacific Corp.
Maywood, Inc.
Morgan Manufacturing.
Nicolai Door; a Morgan Products Ltd. Company.
Schumacher, F.E. Co., Inc.
Semling-Menke Co., Inc.
Simpson Door Company.

Interior Stile and Rail Doors of Stock Design and Construction:
Transparent Finish Doors: Match Architect's sample.
NWWDA Grade: Premium or Select.
Face Veneer: Red Oak

Stain: Match Architect's sample.
Panel Configuration: Flat Profile, Raised Panel;
Design and Layout:
Panel Design: As indicated on drawings.
Interior Doors:
Stile, Top and Intermediate Rail Widths: As indicated.
Bottom Rail Widths: As indicated.
Raised Panel Thickness: 1-3/4 inches (44 mm).

FABRICATION

Fabricate stile and rail wood doors for site fitting.
Factory fit doors to suit frame-opening sizes indicated. Comply with clearance requirements of referenced quality standard for fitting. Comply with requirements in NFPA 80 for fire-rated doors.
Factory machine doors for hardware that is not surface applied.
Factory-Glaze Openings: Comply with Division 8 Section "Glazing."
Field-Glazed Openings: Trim openings indicated for glazing with solid wood moldings of profile indicated, with one side removable.
Transom and Side Panels: Fabricate panels matching adjoining doors in materials, finish, and quality of construction.

SHOP PRIMING

All wood doors to receive Transparent Finish: Shop seal faces and edges of doors with stain.

EXECUTION

INSTALLATION

Install wood doors to comply with referenced quality standard and manufacturer's written instructions.
Fire-Rated Doors: Install in corresponding fire-rated frames according to NFPA 80.
Field Fit Doors: Align and fit doors in frames with uniform clearances and bevels indicated; do not trim stiles and rails in excess of limits set by manufacturer or permitted with fire-rated doors. Machine doors for hardware. Seal cut surfaces after fitting and machining.
Clearances:
At Heads, Jambs and Between Pairs of Doors: 1/8 inch (3.2 mm).
Bottom of Door to Top of Floor Finish or Covering: 1/8 inch (3.2 mm).
Bottom of Door to Top of Threshold: 1/4 inch (6.4 mm).
Fire-Rated Doors: Comply with NFPA 80.
Bevel:
Non-Fire-Rated Doors: 1/8 inch in 2 inches (3-1/2 deg rees)at lock and hinge edges.
Fire-Rated Doors: 1/8 inch in 2 inches (3-1/2 deg rees) on lock edge; trim stiles and rails only to extent permitted by labeling agency.

Factory-Fitted Doors: Align in frames for uniform clearance at each edge.

END OF SECTION 08212

SECTION 08 110 - STEEL DOORS AND FRAMES

1.GENERAL

1. SUMMARY

A. This Section includes steel frames.

2. SUBMITTALS

A. Product Data: For each product indicated. Include door designation, type, level and model, material description, label compliance, fire-resistance ratings, and finishes.

B. Door Schedule. Use same reference designations indicated on Drawings.

3. QUALITY ASSURANCE

A. Steel Door and Frame Standard: Comply with ANSI A 250.8, unless more stringent requirements are indicated.

B. Fire-Rated Door Assemblies: Assemblies complying with NFPA 80 that are listed and labeled by a testing and inspecting agency acceptable to authorities having jurisdiction, for fire-protection ratings indicated, based on testing according to NFPA 252.

2.PRODUCTS

1. MANUFACTURERS

A. Available Manufacturers: Subject to compliance with requirements, manufacturers offering products that may be incorporated into the Work include, but are not limited to, the following:

B. Manufacturers: Subject to compliance with requirements, provide products by one of the following:

1. Amweld Building Products, Inc.
2. Benchmark Commercial Doors; a division of General Products Co., Inc.
3. Ceco Door Products; a United Dominion Company.
4. Copco Door Co.
5. Curries Company.
6. Deansteel Manufacturing, Inc.
7. Kewanee Corporation (The).
8. Mesker Door, Inc.
9. Pioneer Industries Inc.
10. Republic Builders Products.
11. Steelcraft; a division of Ingersoll-Rand.

2. MATERIALS

A. Cold-Rolled Steel Sheets: ASTM A 366/A 366M, Commercial Steel (CS), or ASTM A 620/A 620M, Drawing Steel (DS), Type B; stretcher-leveled standard of flatness.

3. FRAMES

A. General: ANSI A250.8; conceal fastenings, unless otherwise indicated.

B. Door Silencers: Three silencers on single-door frames and two silencers on double-door frames.

C. Plaster Guards: 0.016-inch- (0.4-mm-) thick, steel sheet plaster guards or mortar boxes to close off interior of openings.

D. Supports and Anchors: Not less than 0.042-inch- (1.0-mm-) thick zinc-coated steel sheet.

1. Masonry Wall Anchors: 0.177-inch- (4.5-mm-) diameter, steel wire complying with ASTM A 510 (ASTM A 510M) may be used in place of steel sheet.

E. Inserts, Bolts, and Fasteners: Manufacturer's standard units. Zinc-coat items that are to be built into exterior walls according to ASTM A 153/A 153M, Class C or D as applicable.

4. FABRICATION

A. General: Fabricate steel door and frame units to comply with ANSI A250.8 free from defects including warp and buckle. Where practical, fit and assemble units in manufacturer's plant.

B. Frame Construction:

1. Fabricate frames with mitered or coped and continuously welded corners and seamless face joints. Provide temporary spreader bars.

2. Fabricate knock-down frames with mitered or coped corners, for field assembly.

3. Fabricate knock-down, drywall slip-on frames for in-place gypsum board partitions.

4. Provide terminated stops.

C. Reinforce doors and frames to receive surface-applied hardware. Drilling and tapping for surface-applied hardware may be done at Project site.

D. Locate hardware as indicated or, if not indicated, according to ANSI A250.8.

E. Astragals: As required by NFPA 80 to provide fire ratings indicated.

5. FINISHES

A. Prime Finish: Manufacturer's standard, factory-applied coat of rust-inhibiting primer complying with ANSI A250.10 for acceptance criteria.

3.EXECUTION

1. INSTALLATION

A. Placing Frames: Comply with provisions in SDI 105, unless otherwise indicated. Set frames accurately in position, plumbed, aligned, and braced securely until permanent anchors are set. After wall construction is completed, remove temporary braces and spreaders, leaving surfaces smooth and undamaged.

1. Wall Anchors: Provide at least three anchors per jamb. For openings 90 inches (2286 mm) or more in height, install an additional anchor at hinge and strike jambs.

2. Gypsum Board Partitions: For in-place partitions, install knock-down, drywall slip-on frames.

3. Fire-Rated Frames: Install according to NFPA 80.

B. Door Installation: Comply with ANSI A250.8. Shim as necessary to comply with SDI 122 and ANSI/ DHI A115.1G.

1. Fire-Rated Doors: Install within clearances specified in NFPA 80.

2. Smoke Control Doors: Install to comply with NFPA 105.

C. After installation, remove protective wrappings from doors and frames and touch up prime coat with compatible air-drying primer.

END OF SECTION 08110

PART 1 - GENERAL 1.01

SECTION INCLUDES

A. Factory assembled aluminum clad wood awning windows and fixed units, glass and glazing, operable hardware, weatherstripping, insect screen.

B. Anchorages, attachments, and accessories.

1.02 N/A

1.03 REFERENCES

A. AMERICAN SOCIETY FOR TESTING AND MATERIALS (ASTM):

1.1. ASTM E-283 - Rate of Air Leakage Through Exterior Windows, Curtain Walls, and Doors.

1.2. ASTM E-547 - Water Penetration of Exterior Windows, Curtain Walls, and Doors by Cyclic Static Air Pressure Difference.

1.3. STM E-330 - Structural Performance of Exterior Windows, Curtain Walls, and Doors under Uniform Static Air Pressure Difference.

1.4. ASTM E-1886 - Performance of Exterior Windows, Curtain Walls, Doors, and Impact Protective Systems Impacted by Missile(s) and Exposed to Cyclic Pressure Differentials

1.5. ASTM E-1996 – Performance of Exterior Windows, Curtain Walls, Doors, and Impact Protective Systems Impacted by Windborne Debris in Hurricanes

B. WINDOW & DOOR MANUFACTURERS ASSOCIATION (WDMA):

1. WDMA I.S-4 – 07 Industry Standard for Water-Repellent Preservative Treatment for Millwork

2. AAMA/WDMA/CSA 101/I.S.2/A440 North American Fenestration Standard/Specification for Windows, Doors and Skylights.

C. AMERICAN NATIONAL STANDARDS INSTITUTE (ANSI)

D. NATIONAL FENESTRATION RATING COUNCIL (NFRC)

E. FLORIDA BUILDING CODE (FBC)

1. Test Application Standard (TAS) 201 – Impact Test Procedures

2. Test Application Standard (TAS) 202 – Criteria for Testing Impact & Non-Impact Resistant Building Envelope Components using Uniform Static Air Pressure

3. Test Application Standard (TAS) 203 – Criteria for Testing Products Subject to Cyclic Wind Pressure Loading

1.04 PERFORMANCE CRITERIA

A. Awning units shall meet requirements in accordance with AAMA/WDMA/CSA 101/I.S.2/A440-11.

B. Air leakage shall not exceed 0.30 cfm per sq.ft. of sash when tested in accordance w/ ASTM E-283 at 1.57 psf.

C. No water penetration shall be allowed when tested in accordance with ASTM E-547.

D. Window units shall withstand positive and negative wind loads without damage. The units shall be tested in accordance with ASTM E-330.

E. Windows units shall meet Impact requirements of ASTM E 1886, ASTM E 1996 and TAS 201,202, 203

1.05 SUBMITTALS

A. Shop drawings shall be submitted in accordance with Section 01340.

B. Product data in the form of general catalogs, test lab reports, product performance, and warranty information shall be submitted in accordance with Section 01340.

C. Samples showing glazing, quality of construction, and finish shall be submitted.

PART 2 – PRODUCTS

2.01 MANUFACTURER

A. Pinnacle Impact Series Aluminum Clad Wood Awning window units including fixed units as manufactured by Windsor Windows & Doors: 2555 Lord Baltimore Dr Ste K, Baltimore, MD. (443) 582-9800

2.02 MATERIALS

A. Frame: Shall be select pine treated with water repellent preservative, assembled with hardware installed. Exposed exterior portion shall be extruded aluminum sealed at corners with injected silicone and nylon corner keys. Lock and hinge side stops are face nailed. Jamb thickness shall be 1-1/4". Standard set up jamb width shall be 4-9/16" (4-1/8" basic jamb with 7/16" extender). Other jamb extension available to match finished wall thickness. Rigid aluminum nail fin and color matched drip cap option is available.

B. Sash: Wood interior shall be select pine treated with water repellent preservative. Corners shall be mortise and tenon construction that is fastened with screws. Exterior surfaces shall consist of aluminum extrusion with lapped corners sealed with silicone and foam gaskets. Foam tape is applied to the back side of glass stop.

C. Finish: All aluminum exterior surfaces shall be covered with a factory applied, polyester powder-coat paint in 22 standard and 20 feature colors. Anodized colors are also available.

D. Glazing: Shall be 1" Sea StormTM Laminated LoE 366 insulating glass as standard, glazed with doublefaced tape plus a full perimeter bead of structural silicone, and interior wood stops. A wide array of other glass options is offered including clear, tempered and tints. Cardinal's PreserveTM option is standard. It is a removable, factory-applied protective film adhered to both interior and exterior surfaces of the glass.

E. Weatherstripping: Shall be closed-cell foam encased in TPE film. It shall be installed as a full perimeter seal for positive protection against air and water infiltration. Additional weatherstrip is applied to the top rail and stiles for added protection against water penetration.

F. Hardware: Awnings shall include a lever-activated multi-point locking system. Hinges are concealed and adjustable, with a built in friction arm (24" frame heights and above) to help sash stay in open position. Interior hardware finish options include satin nickel, black, white, oil-rubbed bronze, and faux bronze. Seacoat hardware is standard.

G. Screens: (Optional) Shall be retractable type with BetterVueTM screen cloth as standard. Retractable screens will operate from the top down with a positive latch at sill. Screen head covers, side tracks, and lift rail will be finished with wood veneer on both exterior and interior sides, and available in Pine, Alder, or Fir species. Our insect screens are intended to allow air and light in and keep insects out. The screen is not intended to stop children, adults or animals from falling out an open window.

H. Grilles: NO Grilles

ALUMINUM COLOR: HUNTER GREEN
INTERIOR WOOD CLEAR FINISH

PART 3 - EXECUTION

3.01 EXAMINATION

A. Verify that there is no visible damage to the unit before installation.

3.02 INSTALLATION

A. Verify the rough opening is of the recommended size and that it is plumb, level, and square.

B. Install the window unit in accordance with the manufacturer's recommendations. On operating units, remove shipping blocks after unit is fully installed.

C. Install sealant, backing material, and insulation around opening perimeter

3.03 ADJUSTMENT AND CLEANING

A. Operate unit and verify that all hardware operates freely. Make any adjustments necessary.

B. Cover the window unit to avoid damage due to spray paint, plaster, and other construction operations.

C. Remove all visible labels and instructions.

END OF SECTION 08 52 13

SECTION 09 91 00 – PREPARATORY PAINTING FOR LAZURE FINISH

PART 1 – GENERAL

1.1 SUMMARY

- Scope of Work: This section dictates the mandatory surface preparation, remediation, priming, and base-coating of interior drywall substrates prior to the application of a translucent, multi-layered Lazure glaze finish.
- Coordination: The General Contractor (GC) and Painting Contractor shall coordinate schedules, access, and substrate handover with the designated Lazure Artisan / Master Painter.

1.2 SPECIAL SYSTEM REQUIREMENTS

- Critical Visual Notice: A Lazure finish consists of highly transparent watercolor-like glazes. Because the glaze layers allow light to pass through and reflect off the underlying wall substrate, any surface imperfections, sanding scratches, joint telegraphing, texture variations, or color blocks will show through the final finish.
- Reflective Backing: The white base coat acts as a mirror backing for the Lazure glaze. Complete textural and color uniformity across all contiguous surfaces is required.

1.3 SUBMITTALS & QUALITY CONTROL

- Mock-Ups: Prior to beginning full-scale application, the Painting Contractor shall prepare a 4' x 4' mock-up panel demonstrating a true Level 5 finish, priming, and two coats of the specified white base paint. Obtain written approval from the Lazure Artisan and Architect before proceeding.

PART 2 – PRODUCTS

2.1 PRIMERS & SEALERS

- Stain-Blocking Primer: Alcohol-based primer/sealer (e.g., Zinsser B.I.N. or approved equivalent) for sealing water stains, ink marks, or severe discolorations.
- Drywall Primer/Surfacer: Premium 100% acrylic interior drywall primer formulated for high-build application to achieve uniform surface absorption.

2.2 BASE COAT PAINT MATERIAL

- Color: Factory-mixed Pure Ultra-Bright White (non-tinted background base). Tinted whites, creams, or off-whites are strictly prohibited unless explicitly requested in writing by the Lazure Artisan.
- Sheen/Finish: Premium Matte / Flat or Low-Sheen Satin.
    - Contractor Notice: The exact sheen must be verified with the Lazure Artisan prior to ordering material. Traditional beeswax emulsions require a flat finish, whereas modern acrylic Lazure systems require a high-quality satin or eggshell finish to allow the glaze to slide without immediate absorption.

- Environmental Attributes: Zero-VOC or low-odor, premium 100% acrylic interior wall paint adhering to healthy school criteria (Waldorf Education standards).

PART 3 – EXECUTION

3.1 SURFACE PREPARATION

- Substrate Finish Standard: Substrates must be prepared to a true Level 5 Drywall Finish. A thin skim coat of joint compound must be applied over the entire wall surface to completely conceal joints, eliminate tool marks, and equalize absorption variables.
- Defect Remediation: All cracks, bubbles, nail pops, screw heads, gouges, and micro-scratches must be filled, repaired, and sanded perfectly flat.
- Substrate Cleaning: Ensure all surfaces are vacuumed completely free of drywall dust, dry, and clean of oil, grease, or dirt before coatings are applied.

3.2 PRIMING & SEALING

- Spot-Priming Patchwork: Every isolated area repaired with joint compound after the skim coat must be spot-primed to prevent suction variation ("flashing").
- Full-Surface Priming: Apply one full, continuous coat of acrylic drywall primer over all skim-coated surfaces.

3.3 BASE COAT APPLICATION

- Coating Depth: Apply a minimum of two (2) full, uniform finish coats of the specified ultra-bright white paint.
- Application Method: Apply paint via a high-quality lint-free roller or airless spray followed immediately by back-rolling. Avoid lap marks, runs, sags, heavy stippling, or visible brush strokes.
- Mandatory Re-Work Clause: If any secondary dings, scratches, or construction defects are discovered and patched after the initial white base coats have been rolled, those repaired areas must be spot-primed and re-coated with two (2) full coats of the white base paint. Localized feathering or touch-up patching without dual-layer re-coating will create dark blotches beneath the subsequent transparent Lazure wash.
- Curing Period: Allow the final white base coat to dry and cure for a minimum of 24 to 48 hours under stable climate conditions before handing the space over to the Lazure artisan. The substrate must be fully cured chemically so it will not soften or lift when exposed to highly diluted, water-heavy glaze applications.

END OF SECTION 09 01 00

Section 10 11 13 – Custom Magnetic Chalkboards

Basis of design

This section covers two custom magnetic porcelain-enamel chalkboard units: Unit A, a hinged triptych with chalkboard on both faces of its wings, and Unit B, a three-panel horizontal sliding board that covers custom wood shelving. Sizes below are scaled from the elevations and must be field-verified before shop drawings.

Unit	Location	Configuration	Approx. size (scaled)	Mounting
A – Hinged triptych	Classroom front wall, under custom wood surround, between student desk and teacher's locker	(1) 8'-0" fixed center board, (2) 4'-0" fixed side boards, (2) 4'-0" double-faced swing wings	16'-0" W x 4'-0" H writing surface	Bottom of board 3'-0" AFF; top approx. 7'-0" AFF
B – Horizontal sliding	Over base cabinets, right of tall storage cabinets	(3) 6'-0" sliding panels, no fixed back panel ("pass-through" over open wood shelving)	Approx. 15'-0" W opening x 3'-11 1/2" H panels	Bottom approx. 3'-0" AFF (3" above base cabinet top); 2 1/2" track header; top of unit 7'-0" AFF

How Unit A is read. Closed, the two wings lie over the 8'-0" center board and four 4'-0" faces show. Open, the wings swing outward and lie over the fixed side boards, exposing the center board with the wings' back faces flanking it. This lets the teacher prepare a chalkboard drawing on the center board and reveal it. Triptych operation confirmed by the Architect.

Open items before issue

- Unit A triptych operation; wings hinge on the outer edges of the center board.
- Chalkboard color: black. Faculty to test the black sample with their colored chalk and block crayons at submittal.
- Unit A chalk tray: a continuous tray at 3'-0" will block the wings from swinging over the side boards. Choose short trays at the center board only, a tray set below the wing swing, or a removable tray.
- Unit B: number of tracks (3 recommended, so any panel can be parked over any shelf bay) and panel overlap at the 15'-0" opening.
- Unit B chalk tray: fixed to the bottom guide rail, clear of panel travel, or omitted.
- Unit B shelving depth and front edge: confirm clearance for the top-hung track and bottom guide.
- Frame and trim: hardwood trim at both units, species and finish to match the custom wood shelving behind Unit B, confirmed. Aluminum is limited to concealed track, guides and hinges.
- Wall construction and blocking at both units; Unit A wings impose a large cantilever load on the hinge line.

Part 1 – General

1.1 Summary

1. Section includes:
    a. Unit A: custom hinged magnetic chalkboard triptych with fixed center and side boards and double-faced swing wings.
    b. Unit B: custom top-hung horizontal sliding magnetic chalkboard unit, three panels, no fixed back panel, operating in front of custom wood shelving.
    c. Chalk trays, hinges, tracks, rollers, guides, stops, mounting hardware and accessories.
2. N/A

1.2 References

1. ASTM A424: Steel, sheet, for porcelain enameling.
2. ASTM B221: Aluminum and aluminum-alloy extruded bars, rods, wire, profiles and tubes.
3. ASTM E84: Surface burning characteristics of building materials.
4. ANSI/BHMA A156.26: Continuous hinges.
5. PEI 1002: Porcelain Enamel Institute manufacturing specification for architectural porcelain enamel on steel.
6. 2010 ADA Standards for Accessible Design, Section 307 (protruding objects).

1.3 Preinstallation meeting

1. Before fabrication, meet with the Architect, millwork contractor, Owner's teaching staff and installer. Review Unit A wing operation, chalk tray scheme, blocking, and the interface between Unit B track and the wood shelving.

1.4 Action submittals

1. Product data for writing surface, core, backing, hinges, track, rollers and trim.
2. Shop drawings at 1-1/2" = 1'-0" minimum: elevations of each unit in open and closed positions, wing swing arcs, sections through hinge line, track, bottom guide and chalk tray, panel joints, attachment and blocking, and interface with millwork. Show field-verified dimensions.
3. Samples: 8" x 10" writing surface in black, for faculty chalk testing; hardwood trim sample in the shelving species and finish; 12" lengths of track and trim.
4. Structural data: weight of each wing and sliding panel and the hinge and track load capacity, demonstrating the hinge line will hold the wings without sag.

1.5 Informational and closeout submittals

1. Manufacturer's warranty, sample form.
2. Maintenance data: cleaning instructions, hinge and roller adjustment.
3. Maintenance materials: (2) sets of replacement rollers for Unit B; (2) felt erasers per board.

1.6 Quality assurance

1. Manufacturer: minimum 10 years producing porcelain-enamel visual display units, including custom horizontal sliding units.
2. Installer: trained and approved by the manufacturer.
3. Mock-up: Contractor to provide a hinged wing sample panel (full size, one wing) for the Architect and faculty to review hinge action, hold-open and closed catch before full fabrication. Approved mock-up may become part of the work.

1.7 Delivery, storage and handling

1. Deliver factory-crated. Store flat or on edge per manufacturer, indoors, in a conditioned space.
2. Do not deliver until wet work, painting and millwork installation in the room are complete.

1.8 Field conditions

1. Field-measure openings, millwork and blocking before fabrication; show field dimensions on shop drawings.
2. Install only after the space is enclosed and HVAC is operating at occupancy levels.

1.9 Warranty

1. Writing surface: manufacturer's life-of-building warranty against crazing, cracking, flaking, loss of writability and erasability, and loss of magnetic retention.
2. Hardware, tracks and rollers: 5 years from Substantial Completion.
3. Installation: 2 years from Substantial Completion.

Part 2 – Products

2.1 Manufacturers

1. Basis of design: Claridge Products and Equipment, LCS Porcelain chalkboard surface; Horizontal Sliding System with back panel eliminated ("pass-through") for Unit B; custom fabrication for Unit A.
2. Subject to compliance with requirements, comparable products by one of the following are acceptable:
    a. Polyvision: e3 CeramicSteel chalkboard.
    b. AARCO Products: porcelain chalkboard; 10-170 Horizontal Sliding Units.
    c. Best-Rite (MooreCo): porcelain steel chalkboard; horizontal sliding boards.
3. Provide both units from a single manufacturer.

2.2 Materials

1. Writing surface: porcelain enamel fused to ASTM A424 steel, minimum 24 gauge (0.021" uncoated), matte chalkboard finish, magnetic. Flame spread 25 or less per ASTM E84.
    a. Color: black, manufacturer's standard matte black chalkboard finish.

2. Core: 1/2" particleboard or 3/8" fiberboard as standard with manufacturer; manufacturer's lightweight core at swing wings and sliding panels where needed to meet weight limits below.
3. Backing: aluminum foil or galvanized steel balancing sheet. At double-faced wings, second porcelain face sheet serves as balancing sheet.
4. Laminating adhesive: manufacturer's waterproof adhesive, low-VOC.
5. Extruded aluminum: ASTM B221, alloy 6063-T5, clear satin anodized; for concealed track, guides and hinge hardware only.

2.3 Unit A – Hinged triptych

1. Fixed boards: (1) 8'-0" W x 4'-0" H center board and (2) 4'-0" W x 4'-0" H side boards, single-faced, factory-laminated, mounted to wall in a single plane.
2. Swing wings: (2) 4'-0" W x 4'-0" H, double-faced (porcelain chalkboard both sides), balanced 3-ply or torsion-box construction, maximum 1" thick, flat within 1/16" over the full panel when hung.
    a. Edges: hardwood edge band, species and finish to match the custom wood shelving and surround, furnished by the millwork contractor to the manufacturer for factory application.
3. Hinges: heavy-duty continuous (piano or geared) hinge, full height, ANSI/BHMA A156.26 Grade 1, stainless steel or aluminum, sized by manufacturer for wing weight with no measurable sag at the free edge.
4. Swing: each wing opens 180° to lie flat over its side board and closes flat over the center board. Provide 1/8" clear stand-off so wing faces do not rub fixed boards.
5. Hold-open and catches: magnetic or roller catch in both closed and fully open positions. Wings must not drift into partial-open positions; when held, protrusion from the face of fixed boards may not exceed 4" (ADA 307).
6. Chalk trays: extruded aluminum or wood, full width of center board only; side-board trays set or removable so they do not obstruct wing swing (confirm per open items).
7. Frame: hardwood frame and surround by Section 06 40 23; chalkboard manufacturer to coordinate reveals, hinge mortises and attachment with the millwork contractor.

2.4 Unit B – Horizontal sliding (pass-through)

1. Panels: (3) 6'-0" W x approx. 3'-11 1/2" H, single-faced porcelain chalkboard front, balancing sheet back, factory-laminated, framed with hardwood edge trim, species and finish to match the shelving behind. Conceal the top track behind a matching hardwood fascia. Maximum panel weight per manufacturer's track rating.
2. Back panel: none. Panels slide in front of custom wood shelving furnished under Section 06 40 23.
3. Track: top-hung extruded aluminum, three-track, within a 2 1/2" maximum height header, continuous across the 15'-0" opening (field verify). Panels top-suspended on molded nylon or ball-bearing rollers.
4. Bottom guide: extruded aluminum guide rail on top of base cabinet with nylon guides; panels do not bear on the guide.
5. Stops: adjustable end stops and bumpers at each track end.
6. Pulls: recessed or low-profile finger pulls at both vertical edges of each panel, not projecting past the next track.

7. Chalk tray: on the fixed bottom guide rail in front of the front track, or omitted (confirm per open items).
8. Clearance: coordinate depth of shelving and front edge of shelves with track and guide so panels clear stored materials by 1" minimum.

2.5 Fabrication

1. Fabricate to field-verified dimensions shown on approved shop drawings.
2. Where any board exceeds the maximum single-sheet length, use concealed spline joints, flush and aligned within 1/64".
3. Factory-assemble hinges, tracks and trims where shipping and access allow.

Part 3 – Execution

3.1 Examination

1. Verify that blocking is in place at Unit A hinge lines, fixed board perimeters and Unit B track header, sized for the loads submitted under 1.4.
2. Verify that millwork surround, shelving and base cabinets are installed level and plumb, and that the base cabinet top at Unit B is level within 1/8" over its length.
3. Proceed only after unsatisfactory conditions are corrected.

3.2 Installation – general

1. Install according to manufacturer's instructions and approved shop drawings, plumb, level and in plane within 1/16" in 8'-0".
2. Fasten into blocking with concealed fasteners. Do not rely on gypsum board anchors alone.
3. Set bottom of Unit A boards at 3'-0" AFF and top of Unit B at 7'-0" AFF, field-verified against millwork.

3.3 Installation – Unit A

1. Mount fixed boards first, flush and aligned at all joints.
2. Hang wings on continuous hinges; shim so free edges sit level and parallel to fixed boards with a uniform gap.
3. Install catches at closed and open positions; confirm wings hold in both positions and do not drift.

3.4 Installation – Unit B

1. Install top track and bottom guide parallel within 1/16" over their length.
2. Hang panels, set end stops, and adjust rollers so each panel travels the full opening with a light push and no binding or rubbing on adjacent panels or shelving.

3.5 Adjusting, cleaning and protection

1. Adjust hinges, catches and rollers for smooth, quiet operation.
2. Clean writing surfaces per manufacturer, using no abrasive or solvent cleaners. Remove protective film and labels.
3. Protect units until Substantial Completion; replace any panel that is chipped, crazed or scratched.

3.6 Demonstration

1. Train the Owner's teaching and maintenance staff on wing operation, panel operation, chalk cleaning, and roller and hinge adjustment. Allow one session of 1 hour minimum.

END OF SECTION 10 11 13

Sources

- Claridge Horizontal Sliding System spec sheet
- Polyvision CeramicSteel chalkboards
- Polyvision e3 Chalkboard spec sheet (2024)
- AARCO 10-170 Horizontal Sliding Units (Sweets)

Demonstration

INSTRUCTOR DEMO DESK

Complete your space – coordinates perfectly with our tables.

Base: Constructed of solid oak or maple hardwood and veneers with an earth-friendly UV finish
Storage: Two small drawers (14-3/4"W x 19"D x 5-1/2"H), three large drawers (33-3/4"W x 19"D x 5-1/2"H) and cabinet (36"W x 28"D x 35") with adjustable shelf; All locking and dovetailed; Knee space area (22"W x 30-1/2"H) includes two grommets, one in each cabinet, for wire routing
Epoxy or Phenolic Top: 1" solid epoxy or 3/4" phenolic resin
Electric/Plumbing: GFI-protected AC duplex receptacle; Assembly and installation required
Options: Flat top without sink and fixtures, or sink (18"W x 15"D x 11"H), one hot and cold mixing faucet, double gas cock, polypropylene trap, set of support rods and crossbar
Toe Kick: Rubber base molding with metal corners
Note: mirror and mirror/marker board will not fit this unit

ITEM #	SINK	TOP	OVERALL SIZE
1114	Yes	Solid Phenolic	96"W x 30"D x 36"D
1116	Yes	Epoxy Resin	96"W x 30"D x 36"D
1114F	No	Solid Phenolic	96"W x 30"D x 36"D
1116F	No	Epoxy Resin	96"W x 30"D x 36"D



1116

Accessories

STORAGE TRAYS
All purpose totes for use in tote cabinets and on open shelves. Standard color tan. Other colors available.

ITEM #	SIZE		
	D	W	H
100139	19”	10-1/2”	3-1/2”
100135	19”	14-5/8”	3-1/2”



100135

GREENLAW ARM
Used for conducting experiments, the Greenlaw Arm includes 3/4” x 3/4” clamp, a 3/4” x 36” upright and a 3/4” x 18” crossbar. The uprights fit into a rod socket with a 3/4” receiver that is found in many laboratory units.

ITEM #	DESCRIPTION
100245GRARM	Greenlaw Arm

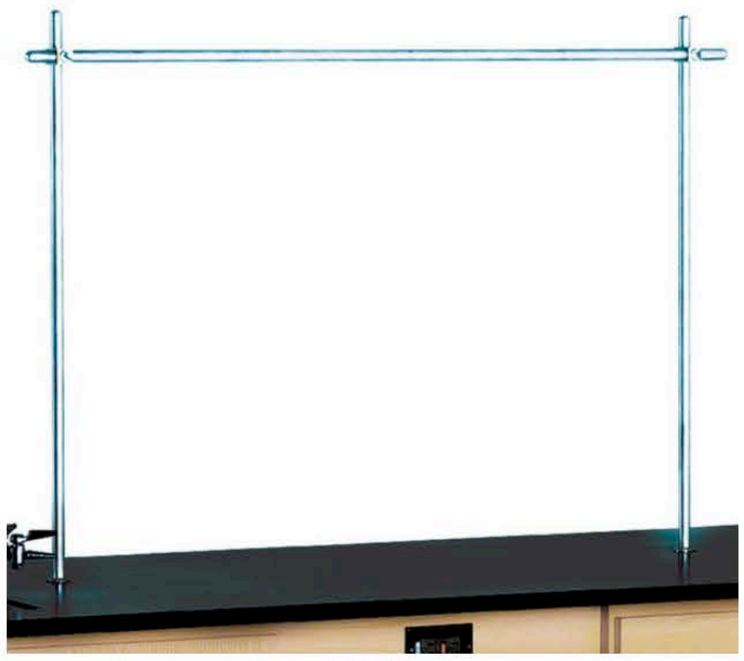

100604

ROD SOCKET & ROD SOCKET INSERT
These solid aluminum rod sockets are rust and acid resistant. Designed to fit tightly into the top of the mobile carts and stationary tables and desk, they receive the tapered end of 3/4” uprights.
The rod socket insert fits in existing rod sockets an allows 1/2” diameter rods to fit the socket.

ITEM #	DESCRIPTION
100001	Rod Socket
100180	Rod Socket Insert



100001

PEGBOARDS
Epoxy resin pegboards furnished with 5” long black polypropylene pegs with glassware protector bases located on 4” centers. Black pegs will be supplied. White pegs illustrated for clarity.

ITEM #	H x W	# OF PEGS
100741	24” x 18”	18
100742	24” x 24”	23
100743	24” x 36”	38
100744	30” x 24”	39
100745	30” x 30”	46
100746	30” x 36”	53
100747	36” x 36”	60
100748	30” x 48”	74

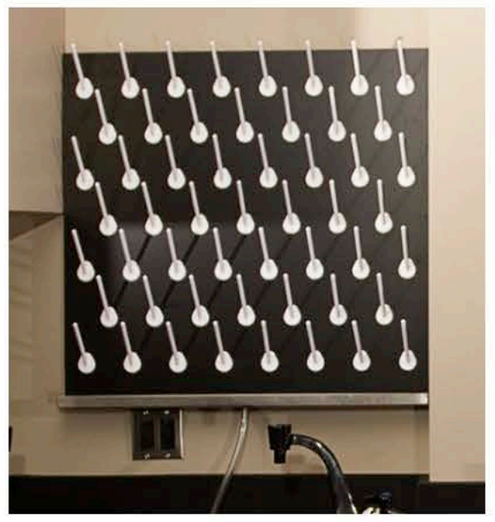

100741



100245GRARM

UPRIGHTS, CROSS BARS AND CLAMPS
Made of solid machined aluminum, these units are nearly impossible to break. The upright is 3/4” diameter with a tapered end to fit in a rod socket. The crossbar is available in 1/2” or 3/4” diameter. The clamp includes two thumbscrews which tighten the upright and crossbar securely together.

ITEM #	DESCRIPTION
100604	Upright Set with Full Crossbar
100002	3/4” x 3/4” Clamp
100003	3/4” x 1/2” Clamp
100182	1/2” x 24” Upright
100004	3/4” x 36” Upright
100005	3/4” x 18” Crossbar
100006	3/4” x 48” Crossbar
100007	1/2” x 40” Crossbar



4000

MIRROR FOR MOBILE DEMONSTRATION TABLES
The shatter resistant acrylic mirror is enclosed in a solid oak frame with a natural transparent finish.

ITEM #	DESCRIPTION
4000	22-1/2” x 34-1/2”

COMBINATION MIRROR MARKER BOARD
Versatile unit allows for the unobstructed use of either the shatter resistant acrylic mirror or the marker board.

ITEM #	DESCRIPTION
4001	20-3/4” x 27-3/4”

LEDALITE

Linear

TruGroove

Suspended micro (lens)

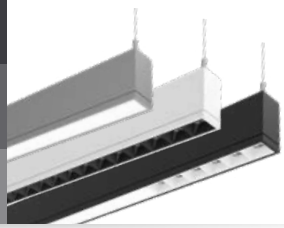

1.75" aperture

TruGroove suspended micro (lens) drives performance beyond the edge. Innovative optics deliver exceptional uniformity and wide row spacing from a 1.75" aperture continuous line of light. Unique Quad Optic louver cells offer a wide range of options from graze to stack to asymmetric wall wash exceeding the demands of the most challenging spaces.

TruGroove suspended micro includes AccuRender technology for the highest color quality at the highest efficacy

Project:

Location:

Cat.No: TMD6L 935L NNN

Type:

Line ID: Qty:

Notes: TM06L935QN30 Q40XX

Ordering guide[12]

example: TM05L940QRPC230Q5008DS1NCSW, A6-1-24

Family	Version	Distribution	Source	CRI/CCT [1,5,8,16]
TM	0	6	L	935
TM TruGroove micro	**0** Suspended	**1** Direct **3** Indirect **5** Indirect / Direct **6** Direct / Indirect	**L** LED	**950** CRI 90, 5000K **940** CRI 90, 4000K **935** CRI 90, 3500K **930** CRI 90, 3000K **927** CRI 90, 2700K **9T2** CRI 90, 2700–6500K 2ch Tunable White (confirm controls)

Optics (Direct)	Lumens (Direct)[1,16]	Optics (Indirect)	Lumens (Indirect)[1,16]	Run Length[7]
Q				

Lens Optic[9,16]

- **N** No lens (specify louver optic)
- **Q** Performance Symmetric Batwing Flush MesoOptics
- **W** Performance Asymmetric Wall Wash Flush MesoOptics
- **L** Definition Symmetric Flush Silk
- **D** Definition Symmetric Drop Silk
- **B** Definition Symmetric Flush Black

Louver cell (specifiy optic, color, length, position)[8,15]

- **N** No louver (must specify lens optic)
- **G** Performance 17° Graze Beam w/MesoOptics
- **R** Performance 27° Narrow Beam w/MesoOptics
- **M** Performance 48° Medium Beam w/MesoOptics
- **S** Performance 63° Stack Beam w/MesoOptics
- **Q** Performance 61° Symmetric Batwing w/MesoOptics
- **W** Performance 20° Asymmetric Wall Wash w/MesoOptics
- **K** Definition Symmetric Silk Optic

Color[15]

- **N** None
- **B** Black
- **W** White
- **P** Platinum
- **G** Gold
- **C** Copper

Length[15]

- **N** None
- **C** 6in (3 Cells)
- **1** 1ft (6 Cells)
- **F** Full length

Position[15]

- **N** None
- **1** One end
- **2** Both ends
- **F** Full length

Lumens (Direct)[1,16]

- **NN** None
- **40** 4000 lm/4ft
- **35** 3500 lm/4ft
- **30** 3000 lm/4ft
- **25** 2500 lm/4ft
- **20** 2000 lm/4ft
- **15** 1500 lm/4ft
- **10** 1000 lm/4ft
- **07** 700 lm/4ft

Optics (Indirect)

- **N** None
- **Q** Performance Symmetric
- **W** Performance Asymmetric

Lumens (Indirect)[1,16]

- **NN** None
- **70** 7000 lm/4ft
- **60** 6000 lm/4ft
- **50** 5000 lm/4ft
- **40** 4000 lm/4ft
- **30** 3000 lm/4ft
- **20** 2000 lm/4ft
- **10** 1000 lm/4ft

Run Length[7]

- **02** 2ft
- **C2** 2.5ft
- **03** 3ft
- **C3** 3.5ft
- **04** 4ft
- **05** 5ft
- **06** 6ft
- **08** 8ft
- **XX** Continuous run in 6" increments (please specify)

Suspended Patterns:

- **A4** 2ft x 2ft Flat Corner (90°)

Notes: For lens/louver combinations please select both lens and louver options. FF full length louver cannot be combined with a lens, must select N for lens option. Continuous runs available in 6in increments (please specify length).

Voltage[3]	Driver[3,5]	Circuit [2,10,11]	Wiring Opt. [2,3,6,10,13]	System/Controls [4,9,14]
D UNV 120–277V **3** 347V	**E** Advance Xitanium 0–10V (1% Dim)	**1** Single Circuit **V** Single Circuit + 1 Thru Wire (BP Trigger) **F** Single Circuit + 4 Thru Wires (Mains & Dimming) **G** Dual Circuit (Up/Down) **W** Dual Circuit (Up/Down) + 1 Thru Wire (BP Trigger)	**N** None **B** Battery Pack **E** Aux. Wiring **G** GTD (please specify voltage)	**NN** None
D UNV 120–277V	**D** Advance Xitanium DALI (5% Dim) **H** Lutron EcoSystem LDE1 (<1% Dim, Fade-to-Black)			
D UNV 120–277V	**S** Advance Xitanium SR (1% Dim)	**1** Single Circuit **V** Single Circuit + 1 Thru Wire (BP Trigger)	**N** None **B** Battery Pack **R** UL924 Sensor Bypass Relay	**NN** None **CS** Interact Pro scalable wireless sensor with integral daylight & occupancy sensing, advanced grouping with dwell time **SB** Interact Pro Enterprise advanced wireless sensor bundle, integral SC1500 with IoT capabilities for enterprise scale projects
D UNV 120–277V	**F** Advance FlexTune SR (1% Dim) **2** 0–10V 2ch (1% Dim) **6** DALI DT6 2ch (1% Dim) **8** DALI DT8 2ch (1% Dim)	**1** Single Circuit **V** Single Circuit + 1 Thru Wire (BP Trigger)	**N** None	**NN** None **CS** Interact Pro scalable wireless sensor with integral daylight & occupancy sensing, advanced grouping with dwell time **SB** Interact Pro Enterprise advanced wireless sensor bundle, integral SC1500 with IoT capabilities for enterprise scale projects

Finish[17]	Mount Type	Ceiling Type	Suspension
W	A	1	
W Standard White **T** Titanium Silver **B** Black **G** Graphite Grey **1** Dark Walnut Woodgrain **2** Light Cherry Woodgrain **3** White Cherry Woodgrain **C** Custom (please specify)	**A** Aircraft cable mount	**1** Non-accessible ceiling, 0°–15° Slope Mount **2** T-Grid, Fixed Position Mount **3** Non-accessible ceiling, 0°–90° Slope Mount **5** T-Grid 24" Span Mount (non tegular tile only) **6-1** T-Grid On-Grid Mount 15/16" (non tegular tile only) **6-2** T-Grid On-Grid Mount 9/16" (non tegular tile only) **6-3** T-Grid On-Grid Mount 9/16" x 5/16" (slot tee & tegular tile)	**24** 24" **144** 144" **48** 48" **192** 192" **96** 96" **240** 240"

Notes: Aircraft cable suspension length is from ceiling to top of luminaire. Standard power cord is white. Black or clear power cords available on request. Standard canopies are white. A1 and A3 canopies can be powder coated to match fixture color on request (*excludes woodgrain finishes). See footnotes on page 2.

Finish options



Standard White (W) | Titanium Silver (T) | Midnight Black (B) | Graphite Grey (G) | Dark Walnut (1) | Light Cherry (2) | White Cherry (3)

DLC Note: Not all product variations listed on this page are DLC qualified. To ensure that a specific model is qualified, visit **www.designlights.org/search**

Ordering guide footnotes

1. Nominal values within a range. Not all lumen packages are available with all configurations. Consult photometry data for CRI, color temp, lumens & distribution of chosen configuration.
2. Not all wiring types are available with all configurations. Consult Ledalite for a complete list of available options.
3. 347V not available with Battery Pack, GTD, DALI, Lutron EcoSystem or Sensor Ready drivers or Interact Pro options. Battery packs available in modules > 4ft (lumen package limits may apply, check with Ledalite).
4. Interact Pro options require separate controls hardware by Signify.
5. Tunable White options are available with 2ch 0–10V, DALI-2 (DT6 or DT8) or Interact Office (PoE) wired drivers. Please enquire about options such as or DMX control (extended lead times may apply).
6. Auxiliary Wiring not available with Interact Pro luminaires. Aux sections are wired to one fixture end only.
7. Flat corners are 90°. No asymmetric lens optics in corners. Please enquire about options for custom angles and intersections. for 2ft D/I configurations please consult factory. (Extended lead times may apply for these options).
8. Tunable White not available with Louver Cell Optics.
9. Integral sensors only recommended at ends of runs for best aesthetics. Mid run sensors can be provided in remote mounts. Integral sensors not available with Drop Lens options. Please enquire about options for remote sensors. Sensors must be combined with a Sensor Ready driver options. Default sensor color is white, fixtures with black finish have black sensors. (Consult factory for other combinations). Other third party sensors also available, please enquire about options for Lutron Athena, or others.
10. Luminaires are pre-wired to both ends with quick wire connectors at one end for standard circuit & battery pack trigger wire (if applicable). Each circuit has its own neutral conductor. All circuits are clearly labelled at each end.
11. Thru Wire options can provide either one additional set of (4) power and dimming wires (Black/White/Purple/Pink or Brown) or one additional battery pack trigger wire (Orange) through a selected module, please consult factory for other Thru Wire options.
12. Other options not shown here may also be possible via a custom request. Extended lead times and minimum order quantities may apply, please consult factory.
13. UL924 listed sensor bypass relay is factory installed between driver & sensor. Must be ordered in same module as integral sensing option. Consult Ledalite for other options. Must be installed in conjunction with a UL1008 device.
14. Must order IRT9015 Interact commissioning remote with each system order.
15. Combination modules with Louver Cells and a Flush Lens may be specified by using the "Louver Cell Length" and "Louver Cell Position" options.
16. Black Lens limits direct lumens to 700 or 1000lm/4ft and indirect lumens to a max of 3000lm/4ft. Tunable White only in MesoOptic, Flush Silk or Drop Silk lenses, consult photometry data for lumens options of chosen configuration.
17. Woodgrain finishes only available in straight runs.

Note: Due to continuing product improvements, Ledalite reserves the right to change the specifications without notice

TruGroove suspended micro (lens)

Options and dimensions

Standalone

Keep it simple with standalone modules, available in 8 standard lengths (consult Ledalite for custom lengths).

2ft
2.5ft
3ft
3.5ft
4ft
5ft
6ft
8ft

Continuous Run

Create an uninterrupted ribbon of light with continuous runs, specifiable to 6 in.

Patterns

Seamlessly create any pattern imaginable (flat corners are 90°, contact Ledalite for custom angles and intersections).

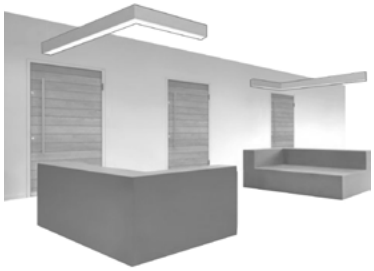

Flush lens

TruGroove suspended micro with 1.75" wide Flush MesoOptics or Silk lens.

Direct/Indirect

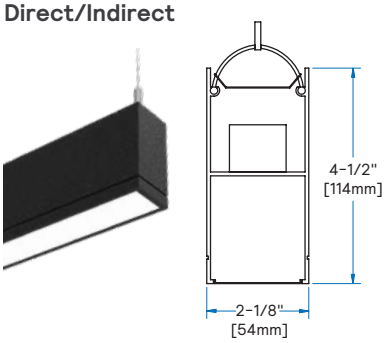

Direct

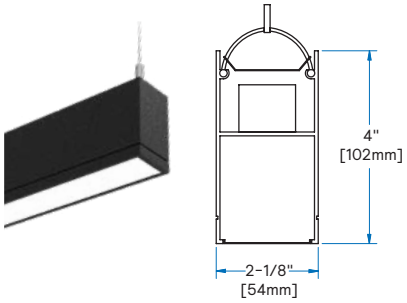

Indirect

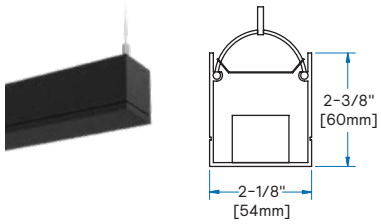

Louver

TruGroove suspended micro with Ledalite's unique quad optic louver cells with MesoOptics in 6 distributions.

Direct/Indirect

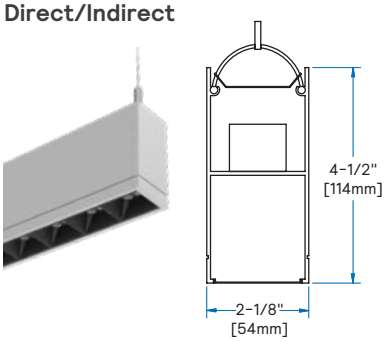

Direct

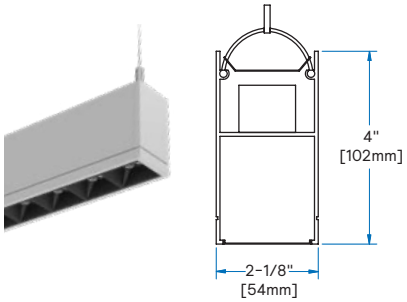

Louvers can be ordered at the full fixture length or in 6 in. or 1 ft sections at one or both ends of a fixture in combination with a lens.



Drop lens and black lens (Coming soon)

TruGroove suspended micro with drop lens and black lens options.



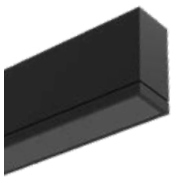

TruGroove suspended micro (lens)

Options and dimensions

Side Views

Standalone

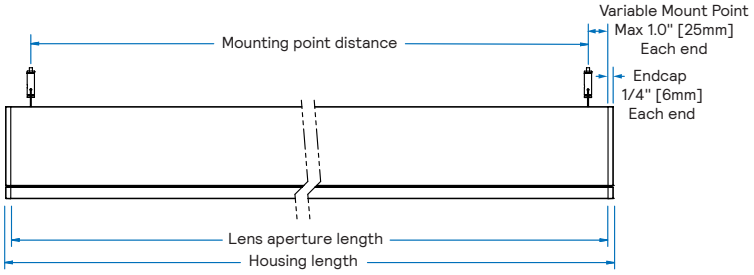

Nominal	Housing	Lens **Aperture**	Mounting **Points**
2ft	24.5" [622mm]	24.0" [610mm]	22.0" [559mm] to 23.5" [597mm]
2.5ft	30.5" [775mm]	30.0" [762mm]	28.0" [711mm] to 29.5" [749mm]
3ft	36.5" [927mm]	36.0" [914mm]	34.0" [864mm] to 35.5" [902mm]
3.5ft	42.5" [1080mm]	42.0" [1067mm]	40.0" [1016mm] to 41.5" [1054mm]
4ft	48.5" [1232mm]	48.0" [1219mm]	46.0" [1168mm] to 47.5" [1207mm]
5ft	60.5" [1537mm]	60.0" [1524mm]	58.0" [1473mm] to 59.5" [1511mm]
6ft	72.5" [1842mm]	72.0" [1829mm]	70.0" [1718mm] to 71.5" [1816mm]
8ft	69.5" [2451mm]	96.0" [2438mm]	94.0" [2388mm] to 95.5" [2426mm]

Continuous Run (Mid-run)

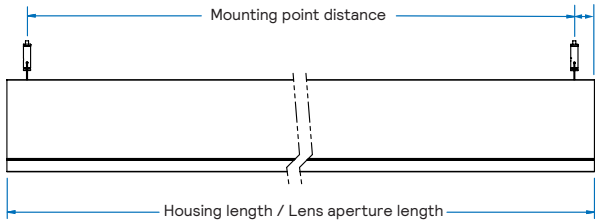

Nominal	Housing	Lens **Aperture**	Mounting **Points**
2ft	24.0" [610mm]	24.0" [610mm]	22.0" [559mm] to 23.5" [597mm]
2.5ft	30.0" [762mm]	30.0" [762mm]	28.0" [711mm] to 29.5" [749mm]
3ft	36.0" [914mm]	36.0" [914mm]	34.0" [864mm] to 35.5" [902mm]
3.5ft	42.0" [1067mm]	42.0" [1067mm]	40.0" [1016mm] to 41.5" [1054mm]
4ft	48.0" [1219mm]	48.0" [1219mm]	46.0" [1168mm] to 47.5" [1207mm]
5ft	60.0" [1524mm]	60.0" [1524mm]	58.0" [1473mm] to 59.5" [1511mm]
6ft	72.0" [1829mm]	72.0" [1829mm]	70.0" [1718mm] to 71.5" [1816mm]
8ft	96.0" [2438mm]	96.0" [2438mm]	94.0" [2388mm] to 95.5" [2426mm]

Continuous Run (End-run)

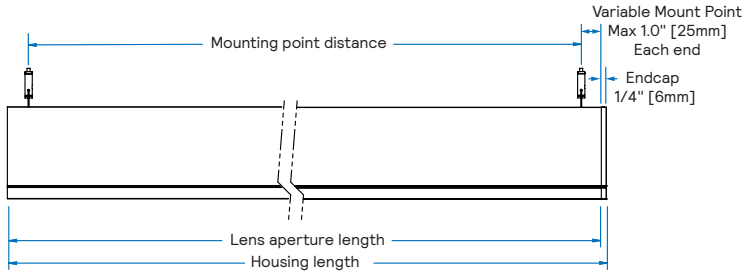

Nominal	Housing	Lens **Aperture**	Mounting **Points**
2ft	24.25" [616mm]	24.0" [610mm]	22.0" [559mm] to 23.5" [597mm]
2.5ft	30.25" [768mm]	30.0" [762mm]	28.0" [711mm] to 29.5" [749mm]
3ft	36.25" [921mm]	36.0" [914mm]	34.0" [864mm] to 35.5" [902mm]
3.5ft	42.25" [1073mm]	42.0" [1067mm]	40.0" [1016mm] to 41.5" [1054mm]
4ft	48.25" [1226mm]	48.0" [1219mm]	46.0" [1168mm] to 47.5" [1207mm]
5ft	60.25" [1530mm]	60.0" [1524mm]	58.0" [1473mm] to 59.5" [1511mm]
6ft	72.25" [1842mm]	72.0" [1829mm]	70.0" [1718mm] to 71.5" [1816mm]
8ft	96.25" [2445mm]	96.0" [2438mm]	94.0" [2388mm] to 95.5" [2426mm]

Top View

Flat Corner 90°

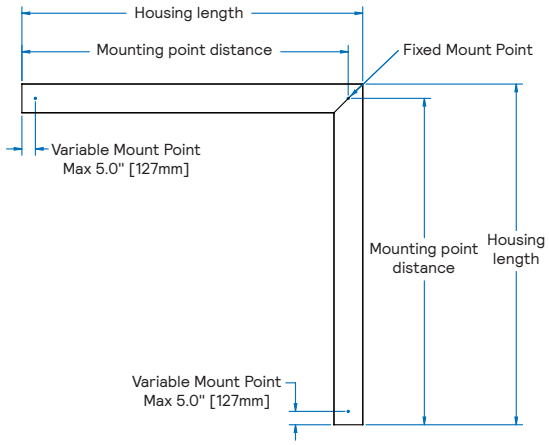

Nominal	Housing	Mounting **Points**
2ft x 2ft	25.1" [636mm]	23.0" [585mm]

Flat corners are 2ft x 2ft and can be used to create suspended patterns.
Flat corners are 90°, contact Ledalite for custom angles and intersections.

TruGroove suspended micro (lens)

Specifications

Optical System

Direct hemisphere: Light emitted from a linear array of downward-facing LEDs is laterally redirected using optical microstructures embedded in a layer of MesoOptics DX film to generate an optimal batwing distribution and a uniform continuum of light. The available Flush Silk lens is a value-oriented option that provides a lambertian distribution while maintaining a uniform continuum of light.

Additionally, Ledalite's unique Quad Optic Louver Cell provides 6 tailored optical distributions with reduced glare.

Indirect hemisphere: White light emitted from a linear array of upward-facing LEDs is shaped into a homogeneous, wide-throw batwing distribution or a low peak angle asymmetric throw using either a free-form elliptical lens or an engineered light guide panel.

Housing

Post painted precision aluminum extrusion.

Endcaps

Diecast flat aluminum endcaps with integral groove to match housing.

Finish

High quality powder coated, available in standard Matte White, Black, Titanium Silver or Graphite Grey. TruGroove can also be specified in any custom color upon request for a one-time setup charge. Optional sensors (such as Interact Pro) available in white only.

Mounting

Suspended: Variable sling mount allows ± 5" of horizontal adjustment from joint or end. Aircraft cable and tamper-resistant gripper provide unlimited vertical adjustment and are independently tested to stringent safety standards.

Joints

Self-aligning joining system with hands-free pre-joining wire access.

Weight

Maximum 3.8/ft (suspended), 10lb (2ft x 2ft suspended corner).

Electrical

Fixtures are factory pre-wired to section ends with quick-wire connectors and tested for all circuits and backup battery packs. LED boards and drivers are easily field replaceable with access from below the ceiling.

Standard Drivers

Advance Xitanium 0-10V, 1% Dimming.
Advance Xitanium DALI, 5% Dimming.
Advance Xitanium Sensor Ready, 1% Dimming.
Lutron EcoSystem LDE1, 1% Dimming with Soft-On and Fade-to-Black.
Class 2 rated output. Consult Ledalite for other available drivers.

Standard Battery Packs

Bodine Battery Pack, 90 min, 10W, Class 2 rated output.
Lumen output = 10W x luminaire efficacy x 1.1. Typical output ~1200lm.

Lumen Maintenance

LEDs have been tested by the manufacturer in accordance with IESNA LM-80-15. At an ambient temperature of 25°C, the LED lumen maintenance expectation according to IES TM-21-11 is:
L_{80} (10k) > 60,000 hours (Reported methodology).

Source Color

LEDs rated for color rendering of:
CRI $R_a \geq 90$, $R_9 \geq 50$, $G_a \geq 97$, $C_9 \geq 90$
IES TM-30-18 : $R_f \geq 90$, $R_{f,h1} \geq 89$, $R_g \geq 99$, $R_{cs,h1} \geq -5\%$

SPD and TM-30-18 reports available upon request

Fixture to fixture color accuracy within:
2 SDCM for Static White luminaires
3 SDCM for Tunable White luminaires

Approvals

Certified to UL, IES & CSA Standards.

Certain versions without battery packs are DesignLights Consortium qualifies. Please see the DLC QPL list for exact catalog numbers. www.designlights.org/QPL

Select TruGroove micro configurations contribute toward satisfying features L03, L04, L06, L07 and L08 under the WELL v2 Building Standard®.

TruGroove is Declare label certified. More information on the TruGroove label can be found on https://declare.living-future.org/ and through the Declare ID **SGY-0007**.

Environment

Rated for dry or damp locations in operating ambient temperatures of 0-25°C (32-77°F).

Many luminaire components, such as reflectors, refractors, lenses, and LEDs are made from various types of plastics which can be adversely affected by airborne contaminants. If sulfur-based chemicals, petroleum-based products, cleaning solutions, or other contaminants are expected in the intended area of use, consult factory for compatibility. Damage caused by sulfur, chlorine, petroleum-based solution or other contaminants are not covered under warranty. Not suitable for natatorium environments.

Warranty

Five-year luminaire limited warranty including LED boards and driver: www.signify.com/warranties

QuickShip

10-day QuickShip available for most configurations upon request. More information available at: www.signify.com/en-us/brands/ledalite/quickship

TruGroove suspended micro (lens)

Wireless Controls Options

Interact Pro scalable sensor for Foundation, Advanced & Enterprise tiers (CS an evolution of SpaceWise):

- CS is a connected sensor with integral occupancy and daylight sensing and supports wireless mesh connectivity.
- The sensor works in the Foundation mode (similar to SpaceWise) when configured without a gateway or in an Interact Pro Advanced or Enterprise mode if a compatible gateway is used.
- Interact Pro includes an App, a portal and a broad portfolio of wireless luminaires, lamps and retrofit kits all working on the same system.
- Startup is implemented via Interact Pro App (Android or iPhone) & Bluetooth connectivity. The App provides flexibility to choose between a gateway or non gateway mode for setup.
- Setup with the gateway requires wired internet access to the gateway. It is possible to add a gateway at a later point.
- Prepare project configuration steps remotely and use IRT9015 remote onsite to identify and group devices together.
- Compatible with UID8451/10 wireless dimmer switch, SWS200 wireless scene switch, wireless Occ sensor (OCC SENSOR IA CM IP42 WH 10/1) and wireless Day/Occ sensor (OCC MULTI SENSOR IA CM WH 10/1).
- For more information on Interact Pro visit: www.interact-lighting.com/interactproscalablesystem

Emergency Options (R):

- Power Sensing (Factory default) – Recommended
- UL924 option requires unswitched power sense line, absence of voltage on the normal circuit triggers luminaire to 100% output.
- Power Interruption Detection (Field option)
- Detects AC power interruption >30ms triggers 90 minute emergency mode with luminaire at 100% output.

Interact Pro scalable sensor bundles for Enterprise tier (SB):

- SB option, in addition to occupancy and daylight sensing, supports advanced IoT capabilities such as people estimation analysis, desk level temperature & humidity sensing, noise classification, and BLE beacon.
- Compatible with UID8451/10 wireless dimmer switch, SWS200 wireless scene switch, wireless Occ sensor (OCC SENSOR IA CM IP42 WH 10/1) and wireless Day/Occ sensor (OCC MULTI SENSOR IA CM WH 10/1).
- Use Interact software and insights to increase building efficiency, achieve building wide integration and optimize space through occupancy analytics.
- Requires compatible Gateway and internet connectivity for commissioning. For more information, visit: www.interact-lighting.com/office

Wired Controls Options

Tunable White:

- Tunable White is available in control options for Tunable White with DALI (DT6 or DT8), 0-10V, or DMX control are available via an Engineered-to-Order (ETO) request.
- Signify tunable white solutions are designed to help maximize the influence of lighting on your daily life.
- Dynamic behaviors via scheduled lighting recipes mimicking daylight patterns or supporting biorhythms.
- Scene setting via lighting pre-sets based on various combinations of lighting color temperature and intensity.

Interact Pro scalable sensor option codes across Genlyte product lines				
	Evokit	Day-Brite	Ledalite	Lightolier
ZeeBee + Bluetooth + Sensing	SWZCS	SWZCS	CS	SBA accessory (external)
ZeeBee + Bluetooth	RADIO	RADIO	RA	RA
ZeeBee + Bluetooth + Sensing + Environmental data	IAOSB	IAOSB	SB	SB
ZeeBee + Highbay + Sensing	-	SWZCSH	-	-

TruGroove suspended micro (lens)

Functionalities overview

	The three tiers of Interact		
			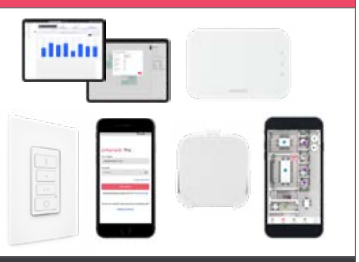
	Standalone	Gateway	Gateway + IoT
Dimming, grouping, and zoning	✓	✓	✓
Bluetooth and ZigBee enabled	✓	✓	✓
Motion sensing and daylight harvesting	✓	✓	✓
Integration with 0–10V and phase dimming fixtures	✓	✓	✓
Code compliance	✓	✓	✓
Granular dimming and dwell time	✓	✓	✓
New Correlated color temperature (CCT) tuning by switch	✓	✓	✓
New Support for sensor-based Tunable White luminaires	✓	✓	✓
Energy reporting and monitoring		✓	✓
Scheduling		✓	✓
Demand response		✓	✓
BMS integration (BACnet)			✓
Floor plan visualization			✓
IoT sensors for wellness			✓
IoT Apps for productivity			✓

Currently supported maximum system size

To be able to design the lighting system correctly for the customer, it is important to know the prime characteristics of the system, its possibilities and limitations.

System level	
Total number of gateways	Unlimited
Total number of devices	200 per network
• luminaires with integrated sensors	150
• smart TLEDS	150
Total number of ZGP devices (sensors and switches)	50
• sensors	30
• switches	50
• zones and groups	64
Group level	
Recommended number of lights	40 (recommended 25)
Number of ZGP devices	5
Number of scenes	16

Interact system architecture for office, education, healthcare, retail, industrial and parking applications

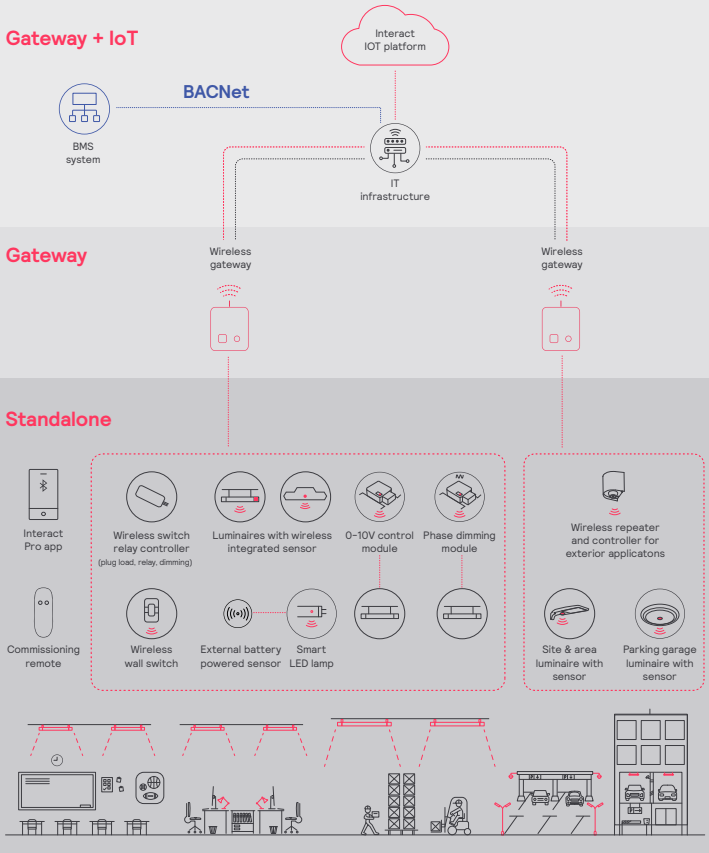

TruGroove suspended micro (lens)

Colorimetry

TruGroove micro (TMxx) AccuRender Static White

Nominal CRI &CCT		CRI 90, 2700K	CRI 90, 3000K	CRI 90, 3500K	CRI 90, 4000K	CRI 90, 5000K
CIE 013.3-1995 [1]	CRI R_a	94	93	93	93	93
	R_g	55	57	59	64	68
	G_a	99	99	99	99	99
	C_g	93	93	93	93	94
IES TM-30-18 [2]	R_f	92	91	91	91	90
	$R_f h_1$	90	90	90	91	89
	R_g	100	100	99	100	100
	R_{cs}, h_1	-6%	-5%	-6%	-5%	-5%
MDER [3]		0.45	0.51	0.58	0.65	0.81

1. Color Rendering Index (CRI Ra) and Strong Red (R9) are calculated in accordance with CIE 013.3-1995. Color Gamut index (Ga) and red chroma Index (C9) are CIE based properties using the Global Lighting Association's calculation tool.
2. Fidelity Index (Rf), Red Fidelity Index (Rf,h1), Gamut Index (Rg), and Red Local Chroma Shift (Rcs,h1) are calculated in accordance with IES TM-30-18.
3. Melanopic Daylight Efficacy Ratio (MDER) is the measure for "spectral melanopic efficiency" as defined in CIE S 026-2018.

Photometry

The following pages contain photometry for TruGroove suspended micro with lens.

Photometry for TruGroove suspended micro with lens can be found by scanning the QR code or following the link: https://share.lighting.com/:i:/r/teams/LedaliteProductManagementIntern/Shared%20Documents/Ledalite%20Spec%20Sheet%20Updates/TruGroove_micro_lens/frame%20(2).png?csf=1&web=1&e=y8midy

TruGroove suspended micro (lens)

Photometry

Direct (TM01) Performance Symmetric Batwing Flush MesoOptic lens

Nominal CRI &CCT			CRI 90, 2700K					CRI 90, 3000K					CRI 90, 3500K					CRI 90, 4000K					CRI 90, 5000K				
Nominal Lumen Package (lm/4ft)		Watts	Flux (lm/4ft) [1]	Efficacy (LPW) [1]	UGR [5]	Photometry Report	IES File	Flux (lm/4ft) [1]	Efficacy (LPW) [1]	UGR [5]	Photometry Report	IES File	Flux (lm/4ft) [1]	Efficacy (LPW) [1]	UGR [5]	Photometry Report	IES File	Flux (lm/4ft) [1]	Efficacy (LPW) [1]	UGR [5]	Photometry Report	IES File	Flux (lm/4ft) [1]	Efficacy (LPW) [1]	UGR [5]	Photometry Report	IES File
Direct	Indirect																										
4000	NA	43.1	3,759	87.2	25.5	PDF	IES	3,856	89.5	25.6	PDF	IES	3,995	92.7	25.7	PDF	IES	4,038	93.7	25.7	PDF	IES	4,085	94.8	25.8	PDF	IES
3500	NA	37.3	3,294	88.3	25.0	PDF	IES	3,372	90.4	25.1	PDF	IES	3,498	93.8	25.3	PDF	IES	3,537	94.8	25.3	PDF	IES	3,575	95.8	25.3	PDF	IES
3000	NA	31.6	2,832	89.6	24.5	PDF	IES	2,894	91.6	24.6	PDF	IES	3,006	95.1	24.7	PDF	IES	3,039	96.2	24.8	PDF	IES	3,070	97.2	24.8	PDF	IES
2500	NA	26.4	2,358	89.3	23.9	PDF	IES	2,407	91.2	24.0	PDF	IES	2,503	94.8	24.1	PDF	IES	2,530	95.8	24.1	PDF	IES	2,555	96.8	24.2	PDF	IES
2000	NA	20.7	1,892	91.4	23.1	PDF	IES	1,930	93.2	23.2	PDF	IES	2,008	97.0	23.3	PDF	IES	2,029	98.0	23.4	PDF	IES	2,048	98.9	23.4	PDF	IES
1500	NA	15.9	1,416	89.1	22.1	PDF	IES	1,445	90.9	22.2	PDF	IES	1,505	94.7	22.3	PDF	IES	1,518	95.5	22.4	PDF	IES	1,533	96.4	22.4	PDF	IES
1000	NA	11.2	933	83.3	20.7	PDF	IES	952	85.0	20.7	PDF	IES	993	88.7	20.9	PDF	IES	999	89.2	20.9	PDF	IES	1,010	90.2	20.9	PDF	IES

Direct (TM01) Performance Asymmetric Wall Wash Flush MesoOptic lens

Nominal CRI &CCT			CRI 90, 2700K					CRI 90, 3000K					CRI 90, 3500K					CRI 90, 4000K					CRI 90, 5000K				
Nominal Lumen Package (lm/4ft)		Watts	Flux (lm/4ft) [1]	Efficacy (LPW) [1]	UGR [5]	Photometry Report	IES File	Flux (lm/4ft) [1]	Efficacy (LPW) [1]	UGR [5]	Photometry Report	IES File	Flux (lm/4ft) [1]	Efficacy (LPW) [1]	UGR [5]	Photometry Report	IES File	Flux (lm/4ft) [1]	Efficacy (LPW) [1]	UGR [5]	Photometry Report	IES File	Flux (lm/4ft) [1]	Efficacy (LPW) [1]	UGR [5]	Photometry Report	IES File
Direct	Indirect																										
4000	NA	43.1	3,641	84.5	24.9	PDF	IES	3,735	86.7	25.0	PDF	IES	3,870	89.8	25.1	PDF	IES	3,911	90.7	25.1	PDF	IES	3,957	91.8	25.2	PDF	IES
3500	NA	37.3	3,190	85.5	24.4	PDF	IES	3,266	87.6	24.5	PDF	IES	3,388	90.8	24.6	PDF	IES	3,426	91.8	24.7	PDF	IES	3,463	92.8	24.7	PDF	IES
3000	NA	31.6	2,743	86.8	23.9	PDF	IES	2,803	88.7	24.0	PDF	IES	2,912	92.2	24.1	PDF	IES	2,944	93.2	24.2	PDF	IES	2,974	94.1	24.2	PDF	IES
2500	NA	26.4	2,284	86.5	23.3	PDF	IES	2,332	88.3	23.3	PDF	IES	2,425	91.9	23.5	PDF	IES	2,451	92.8	23.5	PDF	IES	2,475	93.8	23.6	PDF	IES
2000	NA	20.7	1,832	88.5	22.5	PDF	IES	1,869	90.3	22.6	PDF	IES	1,945	94.0	22.7	PDF	IES	1,965	94.9	22.7	PDF	IES	1,984	95.8	22.8	PDF	IES
1500	NA	15.9	1,371	86.2	21.5	PDF	IES	1,399	88.0	21.6	PDF	IES	1,458	91.7	21.7	PDF	IES	1,470	92.5	21.7	PDF	IES	1,485	93.4	21.8	PDF	IES
1000	NA	11.2	904	80.7	20.0	PDF	IES	922	82.3	20.1	PDF	IES	962	85.9	20.3	PDF	IES	968	86.4	20.3	PDF	IES	979	87.4	20.3	PDF	IES

Direct (TM01) Definition Symmetric Flush Silk lens

Nominal CRI &CCT			CRI 90, 2700K					CRI 90, 3000K					CRI 90, 3500K					CRI 90, 4000K					CRI 90, 5000K				
Nominal Lumen Package (lm/4ft)		Watts	Flux (lm/4ft) [1]	Efficacy (LPW) [1]	UGR [5]	Photometry Report	IES File	Flux (lm/4ft) [1]	Efficacy (LPW) [1]	UGR [5]	Photometry Report	IES File	Flux (lm/4ft) [1]	Efficacy (LPW) [1]	UGR [5]	Photometry Report	IES File	Flux (lm/4ft) [1]	Efficacy (LPW) [1]	UGR [5]	Photometry Report	IES File	Flux (lm/4ft) [1]	Efficacy (LPW) [1]	UGR [5]	Photometry Report	IES File
Direct	Indirect																										
4000	NA	43.1	3,955	91.8	27.2	PDF	IES	4,058	94.2	27.3	PDF	IES	4,204	97.5	27.4	PDF	IES	4,249	98.6	27.4	PDF	IES	4,299	99.7	27.5	PDF	IES
3500	NA	37.3	3,466	92.9	26.7	PDF	IES	3,548	95.1	26.8	PDF	IES	3,681	98.7	26.9	PDF	IES	3,721	99.8	27.0	PDF	IES	3,762	100.9	27.0	PDF	IES
3000	NA	31.6	2,980	94.3	26.2	PDF	IES	3,045	96.4	26.3	PDF	IES	3,163	100.1	26.4	PDF	IES	3,198	101.2	26.4	PDF	IES	3,231	102.2	26.5	PDF	IES
2500	NA	26.4	2,482	94.0	25.6	PDF	IES	2,533	95.9	25.6	PDF	IES	2,634	99.8	25.8	PDF	IES	2,662	100.8	25.8	PDF	IES	2,688	101.8	25.8	PDF	IES
2000	NA	20.7	1,990	96.1	24.8	PDF	IES	2,031	98.1	24.9	PDF	IES	2,113	102.1	25.0	PDF	IES	2,135	103.1	25.0	PDF	IES	2,155	104.1	25.1	PDF	IES
1500	NA	15.9	1,490	93.7	23.8	PDF	IES	1,520	95.6	23.9	PDF	IES	1,583	99.6	24.0	PDF	IES	1,597	100.4	24.0	PDF	IES	1,613	101.4	24.1	PDF	IES
1000	NA	11.2	982	87.7	22.3	PDF	IES	1,002	89.5	22.4	PDF	IES	1,045	93.3	22.5	PDF	IES	1,052	93.9	22.6	PDF	IES	1,063	94.9	22.6	PDF	IES

1. 4ft Luminaire photometry has been conducted in accordance with IES LM-79-08. IES files can be downloaded by clicking the links in the table above, or online at ledalite.com. Luminaires with finishes other than standard white may result in a drop in flux and efficacy.
2. Unified Glare Ratio (UGR) is calculated in accordance with CIE 117-1995. Reference conditions of 4Hx8Hx1H and reflectances of 70/50/20% have been applied using the procedure described in CIE 190-2010.

Performance Symmetric Batwing
Flush MesoOptic lens
Spacing Criteria: 1.17/1.48

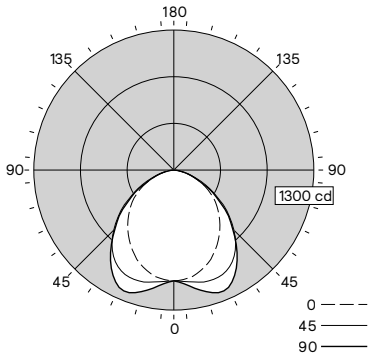

100% Down / 0% Up

Performance Asymmetric Wall Wash
Flush MesoOptic lens
Spacing Criteria: 1.44/1.23

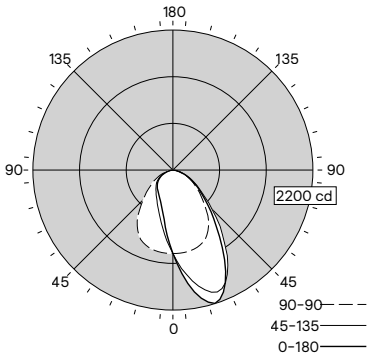

100% Down / 0% Up

Definition Symmetric
Flush Silk lens
Spacing Criteria: 1.23/1.22

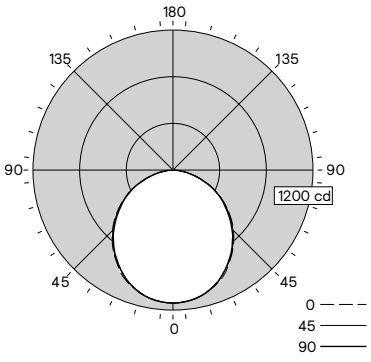

100% Down / 0% Up

Candela plots shown are for 3000lm/4ft, CRI 90, 3500K configurations.

TruGroove suspended micro (lens)

Photometry

Indirect (TM03) Performance Symmetric lens

Nominal CRI &CCT			CRI 90, 2700K					CRI 90, 3000K					CRI 90, 3500K					CRI 90, 4000K					CRI 90, 5000K				
Nominal Lumen Package (lm/4ft)		Watts	Flux (lm/4ft) [1]	Efficacy (LPW) [1]	UGR [5]	Photometry Report	IES File	Flux (lm/4ft) [1]	Efficacy (LPW) [1]	UGR [5]	Photometry Report	IES File	Flux (lm/4ft) [1]	Efficacy (LPW) [1]	UGR [5]	Photometry Report	IES File	Flux (lm/4ft) [1]	Efficacy (LPW) [1]	UGR [5]	Photometry Report	IES File	Flux (lm/4ft) [1]	Efficacy (LPW) [1]	UGR [5]	Photometry Report	IES File
Direct	Indirect																										
NA	7000	55.6	6,532	117.5	N/A	PDF	IES	6,717	120.8	N/A	PDF	IES	7,004	126.0	N/A	PDF	IES	7,089	127.5	N/A	PDF	IES	7,244	130.3	N/A	PDF	IES
NA	6000	45.8	5,606	122.4	N/A	PDF	IES	5,766	125.9	N/A	PDF	IES	5,997	130.9	N/A	PDF	IES	6,079	132.7	N/A	PDF	IES	6,213	135.7	N/A	PDF	IES
NA	5000	37.6	4,693	124.8	N/A	PDF	IES	4,825	128.3	N/A	PDF	IES	5,005	133.1	N/A	PDF	IES	5,079	135.1	N/A	PDF	IES	5,195	138.2	N/A	PDF	IES
NA	4000	29.4	3,754	127.7	N/A	PDF	IES	3,860	131.3	N/A	PDF	IES	3,992	135.8	N/A	PDF	IES	4,057	138.0	N/A	PDF	IES	4,150	141.2	N/A	PDF	IES
NA	3000	22.2	2,817	126.9	N/A	PDF	IES	2,899	130.6	N/A	PDF	IES	2,992	134.8	N/A	PDF	IES	3,043	137.1	N/A	PDF	IES	3,110	140.1	N/A	PDF	IES
NA	2000	14.7	1,895	128.9	N/A	PDF	IES	1,954	132.9	N/A	PDF	IES	2,011	136.8	N/A	PDF	IES	2,049	139.4	N/A	PDF	IES	2,089	142.1	N/A	PDF	IES
NA	1000	8.5	950	111.8	N/A	PDF	IES	981	115.4	N/A	PDF	IES	1,005	118.2	N/A	PDF	IES	1,029	121.1	N/A	PDF	IES	1,045	122.9	N/A	PDF	IES

Indirect (TM03) Performance Asymmetric lens

Nominal CRI &CCT			CRI 90, 2700K					CRI 90, 3000K					CRI 90, 3500K					CRI 90, 4000K					CRI 90, 5000K				
Nominal Lumen Package (lm/4ft)		Watts	Flux (lm/4ft) [1]	Efficacy (LPW) [1]	UGR [5]	Photometry Report	IES File	Flux (lm/4ft) [1]	Efficacy (LPW) [1]	UGR [5]	Photometry Report	IES File	Flux (lm/4ft) [1]	Efficacy (LPW) [1]	UGR [5]	Photometry Report	IES File	Flux (lm/4ft) [1]	Efficacy (LPW) [1]	UGR [5]	Photometry Report	IES File	Flux (lm/4ft) [1]	Efficacy (LPW) [1]	UGR [5]	Photometry Report	IES File
Direct	Indirect																										
NA	6000	57.3	5,602	97.8	N/A	PDF	IES	5,759	100.5	N/A	PDF	IES	6,008	104.9	N/A	PDF	IES	6,079	106.1	N/A	PDF	IES	6,212	108.4	N/A	PDF	IES
NA	5000	45.6	4,681	102.7	N/A	PDF	IES	4,815	105.6	N/A	PDF	IES	5,007	109.8	N/A	PDF	IES	5,075	111.3	N/A	PDF	IES	5,187	113.8	N/A	PDF	IES
NA	4000	35.7	3,753	105.1	N/A	PDF	IES	3,859	108.1	N/A	PDF	IES	4,000	112.0	N/A	PDF	IES	4,060	113.7	N/A	PDF	IES	4,153	116.3	N/A	PDF	IES
NA	3000	26.4	2,824	107.0	N/A	PDF	IES	2,904	110.0	N/A	PDF	IES	3,001	113.7	N/A	PDF	IES	3,051	115.6	N/A	PDF	IES	3,120	118.2	N/A	PDF	IES
NA	2000	17.3	1,888	109.1	N/A	PDF	IES	1,945	112.4	N/A	PDF	IES	2,004	115.8	N/A	PDF	IES	2,040	117.9	N/A	PDF	IES	2,082	120.3	N/A	PDF	IES
NA	1000	9.5	939	98.8	N/A	PDF	IES	970	102.1	N/A	PDF	IES	995	104.7	N/A	PDF	IES	1,017	107.1	N/A	PDF	IES	1,033	108.7	N/A	PDF	IES

1. 4ft Luminaire photometry has been conducted in accordance with IES LM-79-08. IES files can be downloaded by clicking the links in the table above, or online at ledalite.com. Luminaires with finishes other than standard white may result in a drop in flux and efficacy.
2. Unified Glare Ratio (UGR) is calculated in accordance with CIE 117-1995. Reference conditions of 4Hx8Hx1H and reflectances of 70/50/20% have been applied using the procedure described in CIE 190-2010.

Performance Symmetric lens

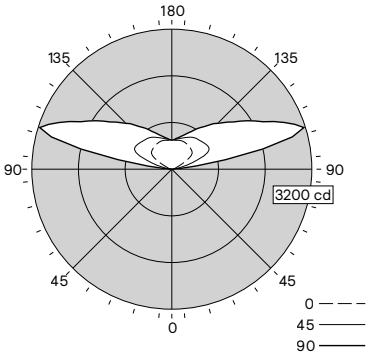

0% Down / 100% Up

Performance Asymmetric lens

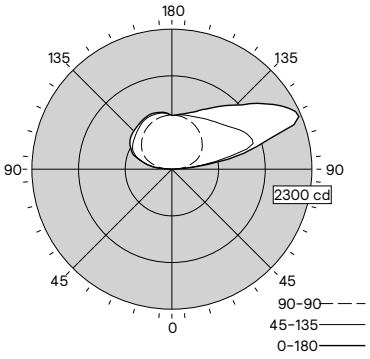

0% Down / 100% Up

Candela plots shown are for 5000lm/4ft, CRI 90, 3500K configurations.

TruGroove suspended micro (lens)

Photometry

Direct/Indirect (TM05 & TM06) Performance Symmetric Batwing Flush MesoOptic lens

Nominal CRI &CCT			CRI 90, 2700K					CRI 90, 3000K					CRI 90, 3500K					CRI 90, 4000K					CRI 90, 5000K				
Nominal Lumen Package (lm/4ft)		Watts	Flux (lm/4ft) [1]	Efficacy (LPW) [1]	UGR [5]	Photometry Report	IES File	Flux (lm/4ft) [1]	Efficacy (LPW) [1]	UGR [5]	Photometry Report	IES File	Flux (lm/4ft) [1]	Efficacy (LPW) [1]	UGR [5]	Photometry Report	IES File	Flux (lm/4ft) [1]	Efficacy (LPW) [1]	UGR [5]	Photometry Report	IES File	Flux (lm/4ft) [1]	Efficacy (LPW) [1]	UGR [5]	Photometry Report	IES File
Direct	Indirect																										
	7000	98.7	10,291	104.3	20.0	PDF	IES	10,573	107.1	20.1	PDF	IES	10,999	111.4	20.1	PDF	IES	11,127	112.7	20.2	PDF	IES	11,328	114.8	20.2	PDF	IES
	6000	88.9	9,365	105.3	20.4	PDF	IES	9,623	108.2	20.5	PDF	IES	9,992	112.4	20.6	PDF	IES	10,117	113.8	20.6	PDF	IES	10,298	115.8	20.7	PDF	IES
	5000	80.8	8,452	104.6	20.8	PDF	IES	8,681	107.4	20.9	PDF	IES	9,000	111.4	21.0	PDF	IES	9,118	112.8	21.1	PDF	IES	9,280	114.9	21.1	PDF	IES
4000	4000	72.4	7,513	103.8	21.4	PDF	IES	7,716	106.6	21.5	PDF	IES	7,987	110.3	21.6	PDF	IES	8,095	111.8	21.7	PDF	IES	8,235	113.7	21.7	PDF	IES
	3000	65.0	6,576	101.2	22.0	PDF	IES	6,755	103.9	22.1	PDF	IES	6,987	107.5	22.3	PDF	IES	7,081	108.9	22.3	PDF	IES	7,195	110.7	22.4	PDF	IES
	2000	57.6	5,653	98.1	22.9	PDF	IES	5,810	100.9	22.9	PDF	IES	6,006	104.3	23.1	PDF	IES	6,087	105.7	23.1	PDF	IES	6,174	107.2	23.1	PDF	IES
	1000	51.2	4,709	92.0	24.0	PDF	IES	4,837	94.5	24.1	PDF	IES	5,000	97.7	24.2	PDF	IES	5,067	99.0	24.2	PDF	IES	5,130	100.2	24.2	PDF	IES
	7000	92.9	9,826	105.8	19.1	PDF	IES	10,089	108.6	19.2	PDF	IES	10,502	113.0	19.4	PDF	IES	10,625	114.4	19.4	PDF	IES	10,818	116.4	19.4	PDF	IES
	6000	83.1	8,900	107.1	19.6	PDF	IES	9,138	110.0	19.7	PDF	IES	9,495	114.3	19.8	PDF	IES	9,615	115.7	19.8	PDF	IES	9,788	117.8	19.8	PDF	IES
	5000	74.9	7,987	106.6	20.1	PDF	IES	8,197	109.4	20.1	PDF	IES	8,502	113.5	20.2	PDF	IES	8,616	115.0	20.3	PDF	IES	8,770	117.1	20.3	PDF	IES
3500	4000	66.6	7,048	105.8	20.7	PDF	IES	7,232	108.6	20.7	PDF	IES	7,490	112.5	20.9	PDF	IES	7,593	114.0	20.8	PDF	IES	7,725	116.0	20.9	PDF	IES
	3000	59.2	6,111	103.2	21.4	PDF	IES	6,271	105.9	21.4	PDF	IES	6,489	109.6	21.6	PDF	IES	6,580	111.1	21.5	PDF	IES	6,685	112.9	21.6	PDF	IES
	2000	51.7	5,188	100.3	22.1	PDF	IES	5,326	103.0	22.2	PDF	IES	5,508	106.5	22.4	PDF	IES	5,585	108.0	22.4	PDF	IES	5,663	109.5	22.4	PDF	IES
	1000	45.4	4,244	93.5	23.3	PDF	IES	4,353	95.9	23.4	PDF	IES	4,503	99.2	23.5	PDF	IES	4,565	100.6	23.6	PDF	IES	4,619	101.7	23.6	PDF	IES
	7000	87.2	9,364	107.4	18.2	PDF	IES	9,611	110.2	18.3	PDF	IES	10,010	114.8	18.4	PDF	IES	10,128	116.1	18.4	PDF	IES	10,314	118.3	18.4	PDF	IES
	6000	77.4	8,438	109.0	18.6	PDF	IES	8,661	111.9	18.7	PDF	IES	9,003	116.3	18.8	PDF	IES	9,118	117.8	18.9	PDF	IES	9,283	119.9	18.8	PDF	IES
	5000	69.3	7,525	108.6	19.1	PDF	IES	7,719	111.4	19.2	PDF	IES	8,011	115.6	19.3	PDF	IES	8,119	117.2	19.4	PDF	IES	8,265	119.3	19.3	PDF	IES
3000	4000	61.0	6,586	108.0	19.8	PDF	IES	6,754	110.7	19.8	PDF	IES	6,998	114.7	20.0	PDF	IES	7,096	116.3	20.0	PDF	IES	7,220	118.4	20.0	PDF	IES
	3000	53.8	5,649	105.0	20.4	PDF	IES	5,793	107.7	20.5	PDF	IES	5,997	111.5	20.6	PDF	IES	6,083	113.1	20.7	PDF	IES	6,180	114.9	20.7	PDF	IES
	2000	46.3	4,727	102.1	21.3	PDF	IES	4,848	104.7	21.4	PDF	IES	5,017	108.4	21.5	PDF	IES	5,088	109.9	21.6	PDF	IES	5,159	111.4	21.6	PDF	IES
	1000	40.1	3,782	94.3	22.6	PDF	IES	3,875	96.6	22.7	PDF	IES	4,011	100.0	22.8	PDF	IES	4,068	101.4	22.9	PDF	IES	4,115	102.6	22.8	PDF	IES
	7000	81.8	8,891	108.7	17.0	PDF	IES	9,124	111.5	17.1	PDF	IES	9,507	116.2	17.2	PDF	IES	9,619	117.6	17.3	PDF	IES	9,799	119.8	17.2	PDF	IES
	6000	72.0	7,964	110.6	17.5	PDF	IES	8,174	113.5	17.5	PDF	IES	8,500	118.1	17.6	PDF	IES	8,609	119.6	17.7	PDF	IES	8,768	121.8	17.6	PDF	IES
	5000	63.9	7,051	110.3	18.0	PDF	IES	7,233	113.2	18.1	PDF	IES	7,508	117.5	18.2	PDF	IES	7,610	119.1	18.3	PDF	IES	7,750	121.3	18.2	PDF	IES
2500	4000	55.8	6,112	109.5	18.6	PDF	IES	6,267	112.3	18.7	PDF	IES	6,495	116.4	18.8	PDF	IES	6,587	118.0	18.9	PDF	IES	6,705	120.2	18.8	PDF	IES
	3000	48.6	5,176	106.5	19.4	PDF	IES	5,307	109.2	19.4	PDF	IES	5,495	113.1	19.6	PDF	IES	5,573	114.7	19.6	PDF	IES	5,665	116.6	19.6	PDF	IES
	2000	41.1	4,253	103.5	20.3	PDF	IES	4,361	106.1	20.3	PDF	IES	4,514	109.8	20.5	PDF	IES	4,579	111.4	20.6	PDF	IES	4,644	113.0	20.5	PDF	IES
	1000	34.9	3,309	94.8	21.7	PDF	IES	3,388	97.1	21.7	PDF	IES	3,508	100.5	21.9	PDF	IES	3,559	102.0	21.9	PDF	IES	3,600	103.2	22.0	PDF	IES
	7000	76.2	8,424	110.6	15.6	PDF	IES	8,646	113.5	15.6	PDF	IES	9,013	118.3	15.7	PDF	IES	9,117	119.6	15.8	PDF	IES	9,292	121.9	15.7	PDF	IES
	6000	66.4	7,498	112.9	16.1	PDF	IES	7,696	115.9	16.1	PDF	IES	8,006	120.6	16.2	PDF	IES	8,107	122.1	16.3	PDF	IES	8,261	124.4	16.2	PDF	IES
	5000	58.3	6,585	113.0	16.6	PDF	IES	6,755	115.9	16.6	PDF	IES	7,013	120.3	16.8	PDF	IES	7,108	121.9	16.8	PDF	IES	7,243	124.2	16.8	PDF	IES
2000	4000	49.9	5,646	113.1	17.2	PDF	IES	5,789	116.0	17.3	PDF	IES	6,001	120.3	17.4	PDF	IES	6,085	121.9	17.5	PDF	IES	6,198	124.2	17.4	PDF	IES
	3000	42.7	4,709	110.3	18.0	PDF	IES	4,829	113.1	18.1	PDF	IES	5,000	117.1	18.2	PDF	IES	5,072	118.8	18.2	PDF	IES	5,159	120.8	18.3	PDF	IES
	2000	35.5	3,786	106.6	19.0	PDF	IES	3,884	109.4	19.1	PDF	IES	4,019	113.2	19.2	PDF	IES	4,077	114.8	19.3	PDF	IES	4,137	116.5	19.2	PDF	IES
	1000	29.1	2,842	97.7	20.5	PDF	IES	2,911	100.0	20.5	PDF	IES	3,013	103.5	20.7	PDF	IES	3,057	105.1	20.7	PDF	IES	3,093	106.3	20.7	PDF	IES
	7000	71.3	7,948	111.5	13.7	PDF	IES	8,162	114.5	13.7	PDF	IES	8,509	119.3	13.8	PDF	IES	8,606	120.7	13.9	PDF	IES	8,777	123.1	13.9	PDF	IES
	6000	61.5	7,022	114.2	14.2	PDF	IES	7,211	117.3	14.2	PDF	IES	7,502	122.0	14.3	PDF	IES	7,597	123.5	14.3	PDF	IES	7,746	126.0	14.4	PDF	IES
	5000	53.4	6,109	114.4	14.7	PDF	IES	6,270	117.4	14.8	PDF	IES	6,509	121.9	14.9	PDF	IES	6,597	123.5	15.0	PDF	IES	6,728	126.0	14.9	PDF	IES
1500	4000	45.3	5,170	114.1	15.4	PDF	IES	5,304	117.1	15.4	PDF	IES	5,497	121.3	15.6	PDF	IES	5,574	123.0	15.6	PDF	IES	5,683	125.5	15.6	PDF	IES
	3000	38.1	4,233	111.1	16.2	PDF	IES	4,344	114.0	16.3	PDF	IES	4,496	118.0	16.4	PDF	IES	4,561	119.7	16.5	PDF	IES	4,643	121.9	16.4	PDF	IES
	2000	30.7	3,310	107.8	17.3	PDF	IES	3,399	110.7	17.4	PDF	IES	3,515	114.5	17.6	PDF	IES	3,567	116.2	17.5	PDF	IES	3,622	118.0	17.6	PDF	IES
	1000	24.3	2,366	97.4	18.9	PDF	IES	2,426	99.8	19.0	PDF	IES	2,510	103.3	19.2	PDF	IES	2,546	104.8	19.1	PDF	IES	2,578	106.1	19.2	PDF	IES
	7000	66.4	7,465	112.4	10.9	PDF	IES	7,669	115.5	11.0	PDF	IES	7,997	120.4	11.1	PDF	IES	8,088	121.8	11.1	PDF	IES	8,254	124.3	11.0	PDF	IES
	6000	56.7	6,539	115.3	11.4	PDF	IES	6,719	118.5	11.4	PDF	IES	6,990	123.3	11.6	PDF	IES	7,078	124.8	11.6	PDF	IES	7,223	127.4	11.6	PDF	IES
	5000	48.5	5,626	116.0	12.0	PDF	IES	5,778	119.1	12.0	PDF	IES	5,998	123.7	12.1	PDF	IES	6,079	125.3	12.2	PDF	IES	6,205	127.9	12.1	PDF	IES
1000	4000	40.6	4,687	115.4	12.7	PDF	IES	4,812	118.5	12.7	PDF	IES	4,985	122.8	12.9	PDF	IES	5,056	124.5	12.8	PDF	IES	5,160	127.1	12.9	PDF	IES
	3000	33.4	3,750	112.3	13.6	PDF	IES	3,852	115.3	13.6	PDF	IES	3,984	119.3	13.8	PDF	IES	4,043	121.0	13.8	PDF	IES	4,121	123.4	13.7	PDF	IES
	2000	25.9	2,827	109.2	14.7	PDF	IES	2,906	112.2	14.7	PDF	IES	3,004	116.0	14.9	PDF	IES	3,048	117.7	15.0	PDF	IES	3,099	119.7	14.9	PDF	IES
	1000	19.6	1,883	96.1	16.5	PDF	IES	1,933	98.6	16.6	PDF	IES	1,998	101.9	16.8	PDF	IES	2,028	103.5	16.8	PDF	IES	2,055	104.8	16.8	PDF	IES

1. 4ft Luminaire photometry has been conducted in accordance with IES LM-79-08. IES files can be downloaded by clicking the links in the table above, or online at ledalite.com. Luminaires with finishes other than standard white may result in a drop in flux and efficacy.
2. Unified Glare Ratio (UGR) is calculated in accordance with CIE 117-1995. Reference conditions of 4Hx8Hx1H and reflectances of 70/50/20% have been applied using the procedure described in CIE 190-2010.
3. For Photometry reports and IES files combining Direct/Indirect distributions other than those listed above, please consult Ledalite.

Performance Symmetric Batwing Flush MesoOptic Lens
Spacing Criteria: 1.17/1.48

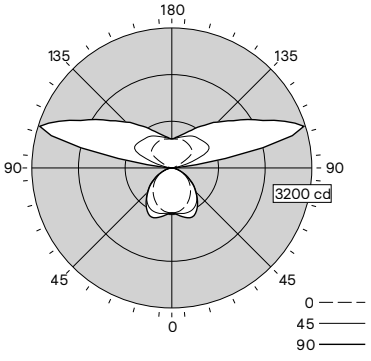

38% Down / 62% Up

Candela plot shown is for 3000lm/4ft Direct / 5000lm/4ft Indirect, CRI 90, 3500K configuration.

TruGroove suspended micro (lens)

Photometry

Direct/Indirect (TM05 & TM06) Performance Asymmetric Wall Wash Flush MesoOptic lens

Nominal CRI &CCT			CRI 90, 2700K					CRI 90, 3000K					CRI 90, 3500K					CRI 90, 4000K					CRI 90, 5000K				
Nominal Lumen Package (lm/4ft)		Watts	Flux (lm/4ft) [1]	Efficacy (LPW) [1]	UGR [5]	Photometry Report	IES File	Flux (lm/4ft) [1]	Efficacy (LPW) [1]	UGR [5]	Photometry Report	IES File	Flux (lm/4ft) [1]	Efficacy (LPW) [1]	UGR [5]	Photometry Report	IES File	Flux (lm/4ft) [1]	Efficacy (LPW) [1]	UGR [5]	Photometry Report	IES File	Flux (lm/4ft) [1]	Efficacy (LPW) [1]	UGR [5]	Photometry Report	IES File
Direct	Indirect																										
4000	6000	100.4	9,243	92.1	19.7	PDF	IES	9,494	94.6	19.7	PDF	IES	9,878	98.4	19.9	PDF	IES	9,990	99.5	19.9	PDF	IES	10,169	101.3	20.0	PDF	IES
	5000	88.7	8,321	93.8	20.2	PDF	IES	8,550	96.4	20.3	PDF	IES	8,877	100.1	20.4	PDF	IES	8,987	101.3	20.4	PDF	IES	9,144	103.1	20.4	PDF	IES
	4000	78.8	7,394	93.8	20.8	PDF	IES	7,594	96.4	20.7	PDF	IES	7,869	99.9	20.9	PDF	IES	7,972	101.2	20.9	PDF	IES	8,110	102.9	21.0	PDF	IES
	3000	69.3	6,465	93.3	21.4	PDF	IES	6,639	95.8	21.5	PDF	IES	6,871	99.1	21.6	PDF	IES	6,962	100.5	21.6	PDF	IES	7,077	102.1	21.6	PDF	IES
	2000	60.2	5,528	91.8	22.2	PDF	IES	5,680	94.4	22.3	PDF	IES	5,873	97.6	22.5	PDF	IES	5,951	98.9	22.5	PDF	IES	6,039	100.3	22.4	PDF	IES
	1000	52.3	4,580	87.6	23.3	PDF	IES	4,705	90.0	23.4	PDF	IES	4,865	93.0	23.5	PDF	IES	4,928	94.2	23.5	PDF	IES	4,990	95.4	23.6	PDF	IES
3500	6000	94.5	8,792	93.0	18.9	PDF	IES	9,025	95.5	18.9	PDF	IES	9,396	99.4	19.1	PDF	IES	9,504	100.6	19.1	PDF	IES	9,675	102.4	19.1	PDF	IES
	5000	82.9	7,871	94.9	19.4	PDF	IES	8,081	97.5	19.5	PDF	IES	8,395	101.3	19.5	PDF	IES	8,501	102.5	19.5	PDF	IES	8,650	104.3	19.6	PDF	IES
	4000	72.9	6,943	95.2	19.9	PDF	IES	7,125	97.7	20.0	PDF	IES	7,387	101.3	20.1	PDF	IES	7,486	102.7	20.2	PDF	IES	7,616	104.5	20.2	PDF	IES
	3000	63.4	6,014	94.9	20.6	PDF	IES	6,171	97.3	20.7	PDF	IES	6,389	100.8	20.8	PDF	IES	6,476	102.1	20.9	PDF	IES	6,583	103.8	20.8	PDF	IES
	2000	54.3	5,078	93.5	21.4	PDF	IES	5,211	96.0	21.5	PDF	IES	5,392	99.3	21.7	PDF	IES	5,466	100.7	21.7	PDF	IES	5,545	102.1	21.8	PDF	IES
	1000	46.5	4,130	88.8	22.6	PDF	IES	4,236	91.1	22.7	PDF	IES	4,383	94.3	22.9	PDF	IES	4,442	95.5	22.9	PDF	IES	4,496	96.7	22.9	PDF	IES
3000	6000	88.9	8,345	93.9	17.9	PDF	IES	8,562	96.3	18.0	PDF	IES	8,920	100.3	18.1	PDF	IES	9,023	101.5	18.1	PDF	IES	9,186	103.3	18.1	PDF	IES
	5000	77.2	7,424	96.2	18.5	PDF	IES	7,618	98.7	18.5	PDF	IES	7,919	102.6	18.6	PDF	IES	8,019	103.9	18.6	PDF	IES	8,161	105.7	18.6	PDF	IES
	4000	67.3	6,496	96.5	19.0	PDF	IES	6,662	99.0	19.1	PDF	IES	6,911	102.7	19.2	PDF	IES	7,004	104.1	19.3	PDF	IES	7,127	105.9	19.2	PDF	IES
	3000	58.0	5,567	96.0	19.8	PDF	IES	5,708	98.4	19.8	PDF	IES	5,913	101.9	20.0	PDF	IES	5,995	103.4	19.9	PDF	IES	6,094	105.1	20.0	PDF	IES
	2000	48.8	4,631	94.9	20.6	PDF	IES	4,748	97.3	20.7	PDF	IES	4,915	100.7	20.8	PDF	IES	4,984	102.1	20.9	PDF	IES	5,056	103.6	20.9	PDF	IES
	1000	41.1	3,682	89.6	21.9	PDF	IES	3,773	91.8	22.0	PDF	IES	3,906	95.0	22.1	PDF	IES	3,961	96.4	22.2	PDF	IES	4,007	97.5	22.2	PDF	IES
2500	6000	83.5	7,887	94.5	16.8	PDF	IES	8,091	96.9	16.8	PDF	IES	8,433	101.0	16.9	PDF	IES	8,529	102.1	16.9	PDF	IES	8,687	104.0	16.9	PDF	IES
	5000	71.8	6,965	97.0	17.2	PDF	IES	7,146	99.5	17.3	PDF	IES	7,431	103.5	17.5	PDF	IES	7,526	104.8	17.5	PDF	IES	7,662	106.7	17.5	PDF	IES
	4000	61.9	6,038	97.5	17.8	PDF	IES	6,190	100.0	17.9	PDF	IES	6,424	103.8	18.1	PDF	IES	6,511	105.2	18.1	PDF	IES	6,628	107.1	18.1	PDF	IES
	3000	52.8	5,109	96.8	18.7	PDF	IES	5,236	99.2	18.8	PDF	IES	5,426	102.8	18.9	PDF	IES	5,502	104.2	18.9	PDF	IES	5,595	106.0	18.9	PDF	IES
	2000	43.6	4,172	95.7	19.7	PDF	IES	4,277	98.1	19.6	PDF	IES	4,428	101.6	19.9	PDF	IES	4,491	103.0	19.8	PDF	IES	4,557	104.5	19.9	PDF	IES
	1000	35.9	3,224	89.8	21.0	PDF	IES	3,302	92.0	21.1	PDF	IES	3,419	95.2	21.2	PDF	IES	3,467	96.6	21.2	PDF	IES	3,508	97.7	21.3	PDF	IES
2000	6000	77.9	7,434	95.4	15.4	PDF	IES	7,628	97.9	15.4	PDF	IES	7,954	102.1	15.5	PDF	IES	8,044	103.3	15.5	PDF	IES	8,196	105.2	15.5	PDF	IES
	5000	66.2	6,513	98.4	15.8	PDF	IES	6,684	101.0	15.9	PDF	IES	6,952	105.0	16.0	PDF	IES	7,040	106.3	16.1	PDF	IES	7,171	108.3	16.0	PDF	IES
	4000	56.3	5,585	99.2	16.5	PDF	IES	5,728	101.7	16.6	PDF	IES	5,945	105.6	16.7	PDF	IES	6,025	107.0	16.7	PDF	IES	6,137	109.0	16.7	PDF	IES
	3000	46.9	4,656	99.3	17.2	PDF	IES	4,774	101.8	17.3	PDF	IES	4,946	105.5	17.5	PDF	IES	5,016	107.0	17.5	PDF	IES	5,104	108.8	17.6	PDF	IES
	2000	38.0	3,720	97.9	18.4	PDF	IES	3,814	100.4	18.4	PDF	IES	3,949	103.9	18.6	PDF	IES	4,005	105.4	18.5	PDF	IES	4,066	107.0	18.6	PDF	IES
	1000	30.3	2,772	91.5	19.8	PDF	IES	2,839	93.7	19.9	PDF	IES	2,940	97.0	20.0	PDF	IES	2,982	98.4	20.1	PDF	IES	3,018	99.6	20.1	PDF	IES
1500	6000	73.0	6,974	95.5	13.4	PDF	IES	7,159	98.1	13.4	PDF	IES	7,466	102.3	13.6	PDF	IES	7,549	103.4	13.6	PDF	IES	7,697	105.4	13.6	PDF	IES
	5000	61.3	6,052	98.7	14.0	PDF	IES	6,214	101.4	14.0	PDF	IES	6,464	105.4	14.2	PDF	IES	6,545	106.8	14.1	PDF	IES	6,672	108.8	14.2	PDF	IES
	4000	51.4	5,124	99.7	14.7	PDF	IES	5,258	102.3	14.7	PDF	IES	5,457	106.2	14.9	PDF	IES	5,530	107.6	14.8	PDF	IES	5,638	109.7	14.8	PDF	IES
	3000	42.2	4,195	99.4	15.5	PDF	IES	4,304	102.0	15.6	PDF	IES	4,459	105.7	15.7	PDF	IES	4,521	107.1	15.7	PDF	IES	4,605	109.1	15.7	PDF	IES
	2000	33.2	3,259	98.2	16.6	PDF	IES	3,344	100.7	16.6	PDF	IES	3,461	104.2	16.8	PDF	IES	3,510	105.7	16.8	PDF	IES	3,567	107.4	16.8	PDF	IES
	1000	25.4	2,311	91.0	18.2	PDF	IES	2,369	93.3	18.3	PDF	IES	2,452	96.5	18.5	PDF	IES	2,487	97.9	18.5	PDF	IES	2,519	99.2	18.5	PDF	IES
1000	6000	68.1	6,506	95.5	10.6	PDF	IES	6,681	98.1	10.7	PDF	IES	6,970	102.3	10.8	PDF	IES	7,047	103.5	10.8	PDF	IES	7,191	105.6	10.9	PDF	IES
	5000	56.4	5,584	99.0	11.2	PDF	IES	5,737	101.7	11.3	PDF	IES	5,969	105.8	11.4	PDF	IES	6,043	107.1	11.5	PDF	IES	6,166	109.3	11.4	PDF	IES
	4000	46.6	4,657	99.9	11.9	PDF	IES	4,781	102.6	11.9	PDF	IES	4,961	106.5	12.2	PDF	IES	5,028	107.9	12.1	PDF	IES	5,132	110.1	12.1	PDF	IES
	3000	37.6	3,728	99.1	12.8	PDF	IES	3,827	101.8	12.9	PDF	IES	3,963	105.4	13.0	PDF	IES	4,019	106.9	13.0	PDF	IES	4,099	109.0	13.0	PDF	IES
	2000	28.4	2,791	98.3	14.0	PDF	IES	2,867	101.0	14.1	PDF	IES	2,965	104.4	14.2	PDF	IES	3,008	105.9	14.2	PDF	IES	3,061	107.8	14.2	PDF	IES
	1000	20.7	1,843	89.0	15.8	PDF	IES	1,892	91.4	15.9	PDF	IES	1,957	94.5	16.0	PDF	IES	1,985	95.9	16.1	PDF	IES	2,012	97.2	16.1	PDF	IES

1. 4ft Luminaire photometry has been conducted in accordance with IES LM-79-08. IES files can be downloaded by clicking the links in the table above, or online at ledalite.com. Luminaires with finishes other than standard white may result in a drop in flux and efficacy.
2. Unified Glare Ratio (UGR) is calculated in accordance with CIE 117-1995. Reference conditions of 4Hx8Hx1H and reflectances of 70/50/20% have been applied using the procedure described in CIE 190-2010.
3. For Photometry reports and IES files combining Direct/Indirect distributions other than those listed above, please consult Ledalite.

Performance Asymmetric Wall Wash Flush MesoOptic lens
Spacing Criteria: 1.44/1.23

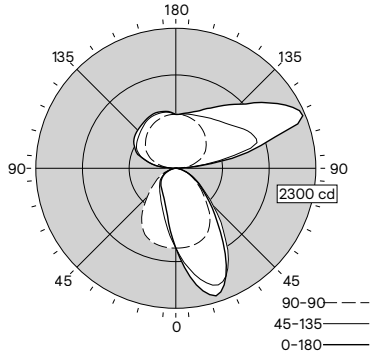

37% Down / 63% Up

Candela plot shown is for 3000lm/4ft Direct / 5000lm/4ft Indirect, CRI 90, 3500K configuration.

TruGroove suspended micro (lens)

Photometry

Direct/Indirect (TM05 & TM06) Definition Symmetric Flush Silk lens

Nominal CRI &CCT			CRI 90, 2700K					CRI 90, 3000K					CRI 90, 3500K					CRI 90, 4000K					CRI 90, 5000K				
Nominal Lumen Package (lm/4ft)		Watts	Flux (lm/4ft) [1]	Efficacy (LPW) [1]	UGR [5]	Photometry Report	IES File	Flux (lm/4ft) [1]	Efficacy (LPW) [1]	UGR [5]	Photometry Report	IES File	Flux (lm/4ft) [1]	Efficacy (LPW) [1]	UGR [5]	Photometry Report	IES File	Flux (lm/4ft) [1]	Efficacy (LPW) [1]	UGR [5]	Photometry Report	IES File	Flux (lm/4ft) [1]	Efficacy (LPW) [1]	UGR [5]	Photometry Report	IES File
Direct	Indirect																										
	7000	98.7	10,487	106.3	21.9	PDF	IES	10,774	109.2	22.0	PDF	IES	11,208	113.6	22.0	PDF	IES	11,338	114.9	22.0	PDF	IES	11,542	116.9	22.1	PDF	IES
	6000	88.9	9,561	107.5	22.2	PDF	IES	9,824	110.5	22.3	PDF	IES	10,201	114.7	22.5	PDF	IES	10,328	116.2	22.5	PDF	IES	10,511	118.2	22.5	PDF	IES
	5000	80.8	8,648	107.0	22.7	PDF	IES	8,883	109.9	22.8	PDF	IES	9,209	114.0	22.9	PDF	IES	9,329	115.5	23.0	PDF	IES	9,494	117.5	22.9	PDF	IES
4000	4000	72.4	7,709	106.5	23.3	PDF	IES	7,917	109.4	23.4	PDF	IES	8,196	113.2	23.5	PDF	IES	8,306	114.7	23.5	PDF	IES	8,448	116.7	23.5	PDF	IES
	3000	65.0	6,772	104.2	23.8	PDF	IES	6,957	107.0	23.9	PDF	IES	7,196	110.7	24.1	PDF	IES	7,293	112.2	24.1	PDF	IES	7,409	114.0	24.2	PDF	IES
	2000	57.6	5,850	101.6	24.6	PDF	IES	6,012	104.4	24.7	PDF	IES	6,215	107.9	24.8	PDF	IES	6,298	109.3	24.9	PDF	IES	6,387	110.9	24.9	PDF	IES
	1000	51.2	4,906	95.8	25.7	PDF	IES	5,039	98.4	25.8	PDF	IES	5,209	101.7	25.9	PDF	IES	5,278	103.1	26.0	PDF	IES	5,343	104.4	26.0	PDF	IES
	7000	92.9	9,998	107.6	21.0	PDF	IES	10,265	110.5	21.1	PDF	IES	10,685	115.0	21.2	PDF	IES	10,810	116.4	21.3	PDF	IES	11,005	118.5	21.2	PDF	IES
	6000	83.1	9,072	109.2	21.5	PDF	IES	9,315	112.1	21.6	PDF	IES	9,678	116.5	21.6	PDF	IES	9,800	117.9	21.6	PDF	IES	9,975	120.0	21.7	PDF	IES
	5000	74.9	8,159	108.9	21.9	PDF	IES	8,374	111.8	22.0	PDF	IES	8,685	116.0	22.1	PDF	IES	8,801	117.5	22.2	PDF	IES	8,957	119.6	22.1	PDF	IES
3500	4000	66.6	7,220	108.4	22.5	PDF	IES	7,408	111.2	22.6	PDF	IES	7,673	115.2	22.7	PDF	IES	7,778	116.8	22.7	PDF	IES	7,911	118.8	22.7	PDF	IES
	3000	59.2	6,283	106.1	23.2	PDF	IES	6,448	108.9	23.3	PDF	IES	6,672	112.7	23.4	PDF	IES	6,765	114.3	23.4	PDF	IES	6,872	116.1	23.4	PDF	IES
	2000	51.7	5,360	103.7	23.9	PDF	IES	5,502	106.4	24.0	PDF	IES	5,691	110.1	24.2	PDF	IES	5,770	111.6	24.2	PDF	IES	5,850	113.2	24.2	PDF	IES
	1000	45.4	4,416	97.3	25.1	PDF	IES	4,529	99.8	25.1	PDF	IES	4,686	103.2	25.3	PDF	IES	4,750	104.6	25.3	PDF	IES	4,806	105.9	25.4	PDF	IES
	7000	87.2	9,512	109.1	20.0	PDF	IES	9,762	111.9	20.1	PDF	IES	10,167	116.6	20.3	PDF	IES	10,287	118.0	20.3	PDF	IES	10,474	120.1	20.3	PDF	IES
	6000	77.4	8,586	110.9	20.5	PDF	IES	8,812	113.9	20.6	PDF	IES	9,160	118.3	20.7	PDF	IES	9,277	119.9	20.7	PDF	IES	9,444	122.0	20.7	PDF	IES
	5000	69.3	7,673	110.7	21.0	PDF	IES	7,871	113.6	21.1	PDF	IES	8,168	117.9	21.2	PDF	IES	8,278	119.5	21.2	PDF	IES	8,426	121.6	21.2	PDF	IES
3000	4000	61.0	6,734	110.4	21.6	PDF	IES	6,905	113.2	21.6	PDF	IES	7,155	117.3	21.7	PDF	IES	7,255	118.9	21.8	PDF	IES	7,381	121.0	21.8	PDF	IES
	3000	53.8	5,797	107.8	22.3	PDF	IES	5,945	110.5	22.3	PDF	IES	6,155	114.4	22.5	PDF	IES	6,242	116.0	22.5	PDF	IES	6,341	117.9	22.5	PDF	IES
	2000	46.3	4,875	105.3	23.1	PDF	IES	4,999	108.0	23.2	PDF	IES	5,174	111.7	23.3	PDF	IES	5,247	113.3	23.4	PDF	IES	5,320	114.9	23.4	PDF	IES
	1000	40.1	3,931	98.0	24.4	PDF	IES	4,027	100.4	24.4	PDF	IES	4,168	103.9	24.6	PDF	IES	4,227	105.4	24.6	PDF	IES	4,276	106.6	24.6	PDF	IES
	7000	81.8	9,014	110.2	18.9	PDF	IES	9,250	113.1	18.9	PDF	IES	9,638	117.8	19.1	PDF	IES	9,751	119.2	19.1	PDF	IES	9,932	121.4	19.1	PDF	IES
	6000	72.0	8,088	112.3	19.4	PDF	IES	8,300	115.3	19.4	PDF	IES	8,631	119.9	19.5	PDF	IES	8,741	121.4	19.5	PDF	IES	8,901	123.6	19.6	PDF	IES
	5000	63.9	7,175	112.3	19.8	PDF	IES	7,358	115.1	19.9	PDF	IES	7,639	119.5	20.1	PDF	IES	7,742	121.2	20.1	PDF	IES	7,884	123.4	20.1	PDF	IES
2500	4000	55.8	6,236	111.8	20.5	PDF	IES	6,393	114.6	20.5	PDF	IES	6,626	118.7	20.7	PDF	IES	6,719	120.4	20.7	PDF	IES	6,838	122.5	20.7	PDF	IES
	3000	48.6	5,299	109.0	21.2	PDF	IES	5,432	111.8	21.3	PDF	IES	5,626	115.8	21.4	PDF	IES	5,706	117.4	21.5	PDF	IES	5,799	119.3	21.4	PDF	IES
	2000	41.1	4,376	106.5	22.1	PDF	IES	4,487	109.2	22.2	PDF	IES	4,645	113.0	22.3	PDF	IES	4,711	114.6	22.4	PDF	IES	4,777	116.2	22.3	PDF	IES
	1000	34.9	3,432	98.3	23.5	PDF	IES	3,514	100.7	23.5	PDF	IES	3,639	104.3	23.7	PDF	IES	3,691	105.8	23.6	PDF	IES	3,733	107.0	23.7	PDF	IES
	7000	76.2	8,523	111.9	17.4	PDF	IES	8,747	114.8	17.5	PDF	IES	9,118	119.7	17.7	PDF	IES	9,223	121.0	17.7	PDF	IES	9,399	123.3	17.7	PDF	IES
	6000	66.4	7,596	114.4	17.9	PDF	IES	7,797	117.4	17.9	PDF	IES	8,111	122.2	18.1	PDF	IES	8,213	123.7	18.1	PDF	IES	8,368	126.0	18.2	PDF	IES
	5000	58.3	6,683	114.6	18.5	PDF	IES	6,856	117.6	18.5	PDF	IES	7,118	122.1	18.6	PDF	IES	7,214	123.7	18.7	PDF	IES	7,351	126.1	18.6	PDF	IES
2000	4000	49.9	5,744	115.1	19.1	PDF	IES	5,890	118.0	19.2	PDF	IES	6,106	122.4	19.3	PDF	IES	6,191	124.1	19.3	PDF	IES	6,305	126.4	19.3	PDF	IES
	3000	42.7	4,808	112.6	19.9	PDF	IES	4,930	115.5	19.9	PDF	IES	5,105	119.6	20.1	PDF	IES	5,178	121.3	20.1	PDF	IES	5,266	123.3	20.1	PDF	IES
	2000	35.5	3,885	109.4	20.8	PDF	IES	3,984	112.2	20.9	PDF	IES	4,124	116.2	21.0	PDF	IES	4,183	117.8	21.1	PDF	IES	4,244	119.5	21.1	PDF	IES
	1000	29.1	2,941	101.1	22.3	PDF	IES	3,012	103.5	22.3	PDF	IES	3,119	107.2	22.6	PDF	IES	3,163	108.7	22.5	PDF	IES	3,200	110.0	22.5	PDF	IES
	7000	71.3	8,022	112.5	15.5	PDF	IES	8,237	115.5	15.6	PDF	IES	8,588	120.4	15.8	PDF	IES	8,686	121.8	15.8	PDF	IES	8,857	124.2	15.8	PDF	IES
	6000	61.5	7,096	115.4	16.0	PDF	IES	7,287	118.5	16.1	PDF	IES	7,581	123.3	16.2	PDF	IES	7,676	124.8	16.3	PDF	IES	7,826	127.3	16.3	PDF	IES
	5000	53.4	6,183	115.8	16.6	PDF	IES	6,346	118.8	16.6	PDF	IES	6,588	123.4	16.8	PDF	IES	6,677	125.0	16.8	PDF	IES	6,808	127.5	16.8	PDF	IES
1500	4000	45.3	5,244	115.8	17.3	PDF	IES	5,380	118.8	17.3	PDF	IES	5,576	123.1	17.5	PDF	IES	5,654	124.8	17.5	PDF	IES	5,763	127.2	17.5	PDF	IES
	3000	38.1	4,307	113.0	18.1	PDF	IES	4,420	116.0	18.2	PDF	IES	4,575	120.1	18.3	PDF	IES	4,640	121.8	18.3	PDF	IES	4,724	124.0	18.3	PDF	IES
	2000	30.7	3,384	110.2	19.1	PDF	IES	3,474	113.2	19.2	PDF	IES	3,594	117.1	19.3	PDF	IES	3,646	118.8	19.4	PDF	IES	3,702	120.6	19.3	PDF	IES
	1000	24.3	2,440	100.4	20.7	PDF	IES	2,501	102.9	20.8	PDF	IES	2,588	106.5	20.9	PDF	IES	2,626	108.1	21.0	PDF	IES	2,658	109.4	21.0	PDF	IES
	7000	66.4	7,514	113.2	12.8	PDF	IES	7,719	116.3	12.8	PDF	IES	8,049	121.2	12.9	PDF	IES	8,140	122.6	13.0	PDF	IES	8,307	125.1	13.0	PDF	IES
	6000	56.7	6,588	116.2	13.3	PDF	IES	6,769	119.4	13.3	PDF	IES	7,042	124.2	13.5	PDF	IES	7,130	125.7	13.5	PDF	IES	7,276	128.3	13.5	PDF	IES
	5000	48.5	5,675	117.0	13.8	PDF	IES	5,827	120.1	13.9	PDF	IES	6,049	124.7	14.1	PDF	IES	6,131	126.4	14.1	PDF	IES	6,258	129.0	14.1	PDF	IES
1000	4000	40.6	4,736	116.7	14.5	PDF	IES	4,862	119.8	14.6	PDF	IES	5,037	124.1	14.7	PDF	IES	5,108	125.8	14.8	PDF	IES	5,213	128.4	14.7	PDF	IES
	3000	33.4	3,799	113.7	15.4	PDF	IES	3,901	116.8	15.4	PDF	IES	4,036	120.8	15.7	PDF	IES	4,095	122.6	15.6	PDF	IES	4,173	124.9	15.7	PDF	IES
	2000	25.9	2,876	111.0	16.6	PDF	IES	2,956	114.1	16.7	PDF	IES	3,056	118.0	16.8	PDF	IES	3,100	119.7	16.8	PDF	IES	3,152	121.7	16.8	PDF	IES
	1000	19.6	1,932	98.6	18.4	PDF	IES	1,983	101.2	18.5	PDF	IES	2,050	104.6	18.6	PDF	IES	2,080	106.1	18.6	PDF	IES	2,108	107.6	18.6	PDF	IES

1. 4ft Luminaire photometry has been conducted in accordance with IES LM-79-08. IES files can be downloaded by clicking the links in the table above, or online at ledalite.com. Luminaires with finishes other than standard white may result in a drop in flux and efficacy.
2. Unified Glare Ratio (UGR) is calculated in accordance with CIE 117-1995. Reference conditions of 4Hx8Hx1H and reflectances of 70/50/20% have been applied using the procedure described in CIE 190-2010.
3. For Photometry reports and IES files combining Direct/Indirect distributions other than those listed above, please consult Ledalite.

Definition Symmetric Flush Silk lens
Spacing Criteria: 1.23/1.22

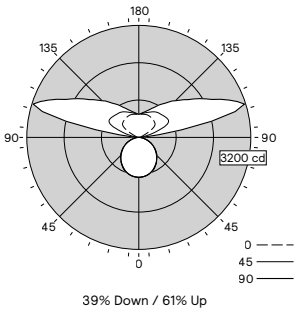

39% Down / 61% Up

Candela plot shown is for 3000lm/4ft Direct / 5000lm/4ft Indirect, CRI 90, 3500K configuration.

© 2025 Signify Holding. All rights reserved. The information provided herein is subject to change, without notice. Signify does not give any representation or warranty as to the accuracy or completeness of the information included herein and shall not be liable for any action in reliance thereon. The information presented in this document is not intended as an commercial offer and does not form part of any quotation or contract, unless otherwise agreed by Signify.

GENLYTE SOLUTIONS
a signify business

Signify North America Corp.
400 Crossing Blvd, Suite 600
Bridgewater, NJ 08807
Telephone: 800-555-0050

Signify Canada Ltd.
281 Hillmount Road,
Markham, ON, Canada L6C 2S3
Telephone: 800-668-9008

All trademarks are owned by Signify Holding or their respective owners.

Day-Brite CFI

Recessed

Arioso LED

1'x4', ,2'x2', 2'x4'

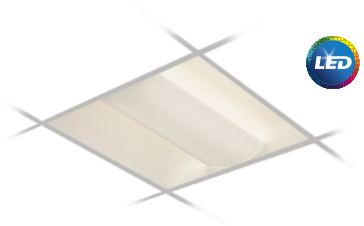

Project:

Location:

Cat.No:

Type:

Lamps: Qty:

Notes:

The Day-Brite / CFI Arioso recessed LED with ribbed acrylic lens offers standard-setting efficiency without aesthetic compromise. These LED luminaires combine state-of-the-art, flexible and globally-recognized LED lighting platforms with proven Arioso optical combinations.

Ordering guide

example: 2AVEG38L835-2-ACR-UNV-DIM

Family	Lumens	CCT	Length	Diffuser	Voltage	Driver	Options (Factory Installed)
1AVEG			4				
1AVEG Arioso LED 1'x4'	**32L** 3200lm **38L** 3800lm	**835** CRI 80, 3500K **840** CRI 80, 4000K	**4** 4'	**ACR** Frosted Ribbed Acrylic Lens	**UNV** Universal 120-277V **347** 347V	**DIM** 0-10V Dimming **SDIM** Step Dimming to 40% Input Power	**F1** 3/8" Flex, 18 ga., 6'; 3 leads (non-dimming) **F2** 3/8" Flex, 18 ga., 6'; 4 leads (emergency, non-dimming) **F1/D** 3/8" Twin Flex, 18 g. 6'; 3 & 2 leads (dimming) **F2/5W** 3/8" Flex, 18 ga., 6'; 5 leads (dimming) **GLR** Fusing, fast blow **DSC** Quick driver disconnect **EM10** [1] 10W Integral Emergency Battery Pack (placed on top of luminaire)
2AVEG Arioso LED 2'x2'	**32L** 3200lm **38L** 3800lm	**835** CRI 80, 3500K **840** CRI 80, 4000K	**2** 2'				
2AVEG Arioso LED 2'x4'	**38L** 3800lm **43L** 4300lm **49L** 4900lm **74L** 7400lm	**835** CRI 80, 3500K **840** CRI 80, 4000K	**4** 4'				

1. EM10 only available on 2'x2' and 2'x4' models.

Accessories

- **AVHD** – Hold down clips
- **FMA14** – 1'x4' "F" mounting frame for NEMA "F" mounting
- **FMA22** – 2'x2' "F" mounting frame for NEMA "F" mounting
- **FMA24** – 2'x4' "F" mounting frame for NEMA "F" mounting
- **1AVE-2AVE-ACR** – 1'x4' and 2'x4' replacement lens
- **2AVE-ACRC** – 2'x2' replacement lens
- **Additional electrical wiring options** – Consult factory

2AVE Arioso recessed LED

1'x4'

Specifications

Features

- 100% frosted ribbed acrylic lens provides soft, balanced, direct and reflected light.
- Seamless welded form – curved top and side reflectors formed together without any gaps or visual barriers.
- High performance LED technology delivers up to 3908 lm at 40W.
- Multiple lumen outputs available to balance energy savings with lighting application needs.
- Ideal for indoor general area lighting – offices, schools, retail and health care applications.
- 80+ CRI and excellent color consistency.
- Capable of providing 35-50% energy savings over 2-T5 (28W) fluorescent luminaires.
- High efficiency LEDs have a minimum 50,000 hour rated life (L70).
- Predicted L70 lifetime based on LED manufacturer's supplied LM-80 data and in-situ laboratory testing.
- Dimming option available.

Construction/Finish

- 20 gauge steel housing assembly.
- 95% reflectance baked white acrylic matte paint finish.

Electrical

- LED boards and drivers are RoHS (Restriction of Hazardous Substances) compliant. For dimming options, consult factory. LED array and driver accessible from below.
- cCSAus listed.

Enclosure

- High performance contoured lens conceals lamp image providing balance between reflected and direct light.

Dimensions

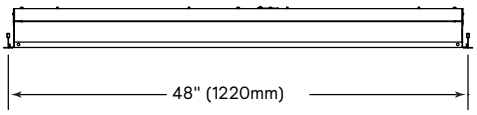

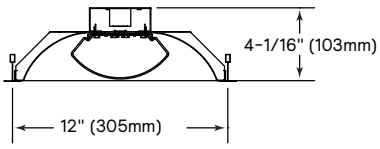

Ceiling compatibility for G type luminaire

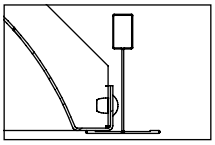

Suited to standard exposed 15/16" T-grid ceilings

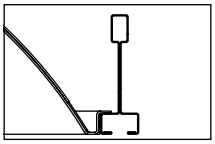

Suited to standard exposed Slot T-grid ceilings

2AVE Arioso recessed LED

1'x4'

Photometry

Arioso recessed LED ribbed acrylic 1x4, 3200 nominal lumens LER – 103

Catalog No.	1AVEG32L840-4-ACR
Test No.	31659
S/MH	1.3
Lamp Type	LED
Lumens/Lamp	3168
Input Watts	30.7

Comparative yearly lighting energy cost per 1000 lumens – **$2.33** based on 3000 hrs. and $.08 pwr KWH.

Candlepower

Angle	End	45	Cross
0	1139	1139	1139
5	1134	1148	1108
10	1117	1135	1097
15	1086	1108	1071
20	1044	1068	1041
25	989	1024	998
30	924	968	948
35	847	904	894
40	763	833	832
45	672	755	763
50	578	672	691
55	490	586	611
60	403	501	524
65	322	415	416
70	243	324	299
75	173	227	185
80	109	132	94
85	53	52	36

Light Distribution

Degrees	Lumens	% Luminaire
0–30	883	27.91
0–40	1438	45.44
0–60	2512	79.39
0–90	3164	100.00

Coefficients of Utilization

EFFECTIVE FLOOR CAVITY REFLECTANCE 20 PER (pfc=0.20)

pcc	80			70			50	
pw	70	50	30	70	50	30	50	30
RCR								
0	1.19	1.19	1.19	1.16	1.16	1.16	1.11	1.11
1	1.10	1.05	1.01	1.07	1.03	.99	.99	.96
2	1.01	.93	.87	.98	.91	.85	.88	.83
3	.92	.82	.75	.90	.81	.74	.78	.72
4	.85	.74	.66	.83	.73	.65	.70	.63
5	.78	.66	.57	.76	.65	.57	.63	.56
6	.72	.59	.51	.70	.58	.50	.56	.49
7	.66	.53	.45	.65	.52	.44	.51	.43
8	.62	.48	.40	.60	.47	.40	.46	.39
9	.57	.44	.36	.56	.43	.35	.42	.35
10	.53	.40	.32	.52	.39	.32	.38	.31

Arioso recessed LED ribbed acrylic 1x4, 3800 nominal lumens LER – 97

Catalog No.	1AVEG38L840-4-ACR
Test No.	31660
S/MH	1.3
Lamp Type	LED
Lumens/Lamp	3908
Input Watts	40.4

Comparative yearly lighting energy cost per 1000 lumens – **$2.47** based on 3000 hrs. and $.08 pwr KWH.

Candlepower

Angle	End	45	Cross
0	1401	1401	1401
5	1395	1412	1366
10	1374	1396	1354
15	1337	1363	1322
20	1285	1314	1285
25	1218	1259	1232
30	1137	1191	1170
35	1044	1110	1102
40	941	1023	1027
45	829	926	941
50	715	825	852
55	602	719	756
60	499	614	651
65	398	509	519
70	302	400	374
75	214	284	233
80	136	168	119
85	65	67	46

Light Distribution

Degrees	Lumens	% Luminaire
0–30	1087	27.85
0–40	1770	45.35
0–60	3092	79.21
0–90	3904	100.00

Coefficients of Utilization

EFFECTIVE FLOOR CAVITY REFLECTANCE 20 PER (pfc=0.20)

pcc	80			70			50	
pw	70	50	30	70	50	30	50	30
RCR								
0	1.19	1.19	1.19	1.16	1.16	1.16	1.11	1.11
1	1.10	1.05	1.01	1.07	1.03	.99	.99	.96
2	1.01	.93	.87	.98	.91	.85	.87	.83
3	.92	.82	.75	.90	.81	.74	.78	.72
4	.85	.74	.66	.83	.72	.65	.70	.63
5	.78	.66	.57	.76	.65	.57	.63	.56
6	.72	.59	.51	.70	.58	.50	.56	.49
7	.66	.53	.44	.65	.52	.44	.51	.43
8	.61	.48	.40	.60	.47	.39	.46	.39
9	.57	.44	.36	.56	.43	.35	.42	.35
10	.53	.40	.32	.52	.39	.32	.38	.31

Catolog Number	Delivered Lumens	Input Watts	Efficacy lm/W	8'x8' avg fc	8'x8' W/sq ft	8'x10' avg fc	8'x10' W/sq ft
1AVEG32L840-4-ACR	3168	30.7	103	49.4	0.48	39.6	0.38
1AVEG38L840-4-ACR	3908	40.4	97	61.0	0.63	48.8	0.51

2AVE Arioso recessed LED

2'x2'

Features

- 100% frosted ribbed acrylic lens provides soft, balanced, direct and reflected light.
- Seamless welded form – curved top and side reflectors formed together without any gaps or visual barriers.
- High performance LED technology delivers up to 3824 lm at 40.5W.
- Multiple lumen outputs available to balance energy savings with lighting application needs.
- Ideal for indoor general area lighting – offices, schools, retail and health care applications.
- 80+ CRI and excellent color consistency.
- Capable of providing 25-40% energy savings over 2-T5HO (28W) fluorescent luminaires.
- High efficiency LEDs have a minimum 50,000 hour rated life (L70).
- Predicted L70 lifetime based on LED manufacturer's supplied LM-80 data and in-situ laboratory testing.
- Dimming option available.

Construction/Finish

- 20 gauge steel housing assembly.
- 95% reflectance baked white acrylic matte paint finish.

Electrical

- LED boards and drivers are RoHS (Restriction of Hazardous Substances) compliant. For dimming options, consult factory. LED array and driver accessible from below.
- cCSAus listed.

Enclosure

- High performance contoured lens conceals lamp image providing balance between reflected and direct light.

Dimensions

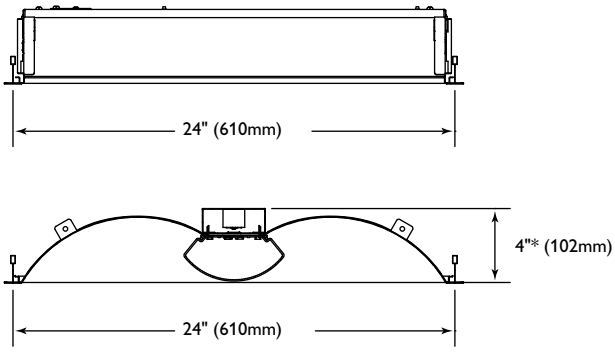

Ceiling compatibility for G type luminaire

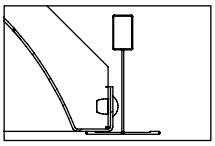

Suited to standard exposed 15/16" T-grid ceilings

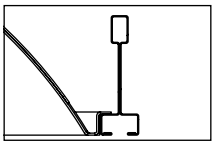

Suited to standard exposed Slot T-grid ceilings

* EMLED is 1-3/4" (45mm) deeper.

Photometry

Arioso Recessed LED Ribbed Acrylic 2x2, 3200 nominal lumens **LER – 99**

Catalog No.	2AVEG32L840-2-ACR
Test No.	31661
S/MH	1.3
Lamp Type	LED
Lumens/Lamp	3103
Input Watts	31.3

Comparative yearly lighting energy cost per 1000 lumens – **$2.42** based on 3000 hrs. and $.08 pwr KWH.

Candlepower

Angle	End	45	Cross
0	1063	1063	1063
5	1053	1062	1063
10	1034	1049	1056
15	1001	1022	1031
20	955	983	1002
25	899	938	966
30	833	884	921
35	762	823	874
40	684	758	821
45	605	690	762
50	524	616	701
55	442	540	635
60	364	469	569
65	289	397	502
70	220	329	434
75	157	262	363
80	99	190	249
85	47	89	95

Light Distribution

Degrees	Lumens	% Luminaire
0-30	819	26.42
0-40	1332	42.97
0-60	2344	75.62
0-90	3099	100.00

Coefficients of Utilization

EFFECTIVE FLOOR CAVITY REFLECTANCE 20 PER (pfc=0.20)

pcc	80			70			50	
pw	70	50	30	70	50	30	50	30
RCR								
0	1.19	1.19	1.19	1.16	1.16	1.16	1.11	1.11
1	1.09	1.04	1.00	1.06	1.02	.98	.97	.94
2	.99	.91	.85	.97	.89	.83	.86	.81
3	.91	.80	.72	.88	.79	.71	.76	.70
4	.84	.72	.63	.81	.71	.63	.68	.61
5	.77	.64	.55	.75	.63	.55	.61	.54
6	.71	.58	.49	.69	.57	.48	.55	.47
7	.65	.52	.43	.63	.51	.42	.49	.42
8	.60	.47	.38	.59	.46	.38	.45	.37
9	.56	.43	.34	.55	.42	.34	.41	.33
10	.52	.39	.31	.51	.38	.31	.37	.30

2AVE Arioso recessed LED

2'x2'

Arioso Recessed LED Ribbed Acrylic 2x2, 3800 nominal lumens **LER – 94**

Catalog No.	2AVEG38L840-2-ACR
Test No.	31662
S/MH	1.3
Lamp Type	LED
Lumens/Lamp	3824
Input Watts	40.5

Comparative yearly lighting energy cost per 1000 lumens – **$2.55** based on 3000 hrs. and $.08 pwr KWH.

Candlepower

Angle	End	45	Cross
0	1322	1322	1322
5	1309	1319	1323
10	1285	1302	1314
15	1245	1268	1282
20	1188	1219	1247
25	1118	1162	1201
30	1037	1093	1145
35	947	1015	1087
40	851	934	1021
45	752	845	948
50	652	754	872
55	551	659	790
60	453	570	708
65	360	479	624
70	273	390	540
75	195	313	452
80	123	227	313
85	58	108	119

Light Distribution

Degrees	Lumens	% Luminaire
0-30	1017 2	6.61
0-40	1651	43.23
0-60	2898	75.88
0-90	3820	100.00

Coefficients of Utilization

EFFECTIVE FLOOR CAVITY REFLECTANCE 20 PER (pfc=0.20)

pcc	80			70			50	
pw	70	50	30	70	50	30	50	30
RCR								
0	1.19	1.19	1.19	1.16	1.16	1.16	1.11	1.11
1	1.09	1.04	1.00	1.06	1.02	.98	.97	.94
2	.99	.91	.85	.97	.89	.83	.86	.81
3	.91	.80	.72	.88	.79	.72	.76	.70
4	.84	.72	.64	.82	.71	.63	.68	.61
5	.77	.64	.56	.75	.63	.55	.61	.54
6	.71	.58	.49	.69	.57	.48	.55	.48
7	.65	.52	.43	.64	.51	.43	.49	.42
8	.61	.47	.39	.59	.46	.38	.45	.37
9	.56	.43	.34	.55	.42	.34	.41	.34
10	.52	.39	.31	.51	.38	.31	.37	.30

Catolog Number	Delivered Lumens	Input Watts	Efficacy lm/W	8'x8' avg fc	8'x8' W/sq ft	8'x10' avg fc	8'x10' W/sq ft
2AVEG32L840-2-ACR	3103	31.3	99	48.4	0.49	38.7	0.39
2AVEG38L840-2-ACR	3824	40.5	94	59.7	0.63	47.8	0.51

2AVE Arioso recessed LED

4'x4'

Features

- 100% frosted ribbed acrylic lens provides soft, balanced, direct and reflected light.
- Seamless welded form – curved top and side reflectors formed together without any gaps or visual barriers.
- High performance LED technology capable of delivering up to 7400 lm at 74.9W.
- Multiple lumen outputs available to balance energy savings with lighting application needs.
- Ideal for indoor general area lighting – offices, schools, retail and health care applications.
- High lumen package version available for retail applications (7400 lm at 75W) - provides similar light output to a 3-32W T8 luminaire and 12% energy savings.
- 80+ CRI and excellent color consistency.
- High efficiency LEDs have a minimum 50,000 hour rated life (L70).
- Predicted L70 lifetime based on LED manufacturer's supplied LM-80 data and in-situ laboratory testing.
- Dimming option available.

Construction/Finish

- 20 gauge steel housing assembly.
- 95% reflectance baked white acrylic matte paint finish.

Electrical

- LED boards and drivers are RoHS (Restriction of Hazardous Substances) compliant. For dimming options, consult factory. LED array and driver accessible from below.
- cCSAus listed.

Enclosure

- High performance contoured lens conceals lamp image providing balance between reflected and direct light.

Dimensions

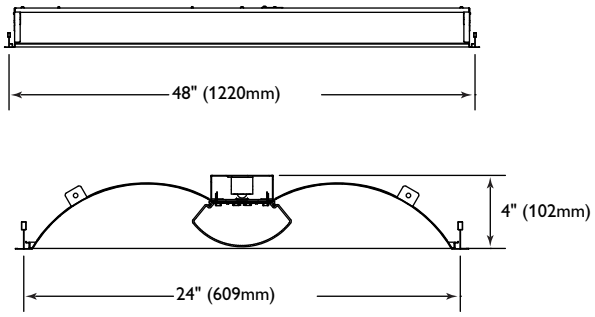

Ceiling compatibility for G type luminaire

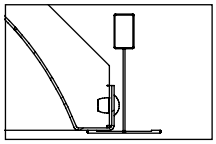

Suited to standard exposed 15/16" T-grid ceilings

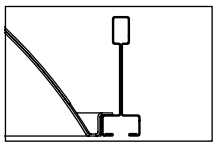

Suited to standard exposed Slot T-grid ceilings

* EMLED is 1-3/4" (45mm) deeper.

Photometry

Arioso Recessed LED Ribbed Acrylic 2x4, 3800 nominal lumens **LER – 97**

Catalog No.	2AVEG38L840-4-ACR
Test No.	31664
S/MH	1.3
Lamp Type	LED
Lumens/Lamp	3920
Input Watts	40.3

Comparative yearly lighting energy cost per 1000 lumens – **$2.47** based on 3000 hrs. and $.08 pwr KWH.

Candlepower

Angle	End	45	Cross
0	1345	1345	1345
5	1341	1354	1310
10	1320	1338	1298
15	1284	1307	1268
20	1234	1261	1233
25	1169	1209	1185
30	1092	1145	1127
35	1001	1068	1064
40	901	986	992
45	796	903	912
50	683	799	830
55	573	699	743
60	466	604	657
65	364	507	569
70	272	416	483
75	195	332	398
80	124	246	289
85	60	136	121

Light Distribution

Degrees	Lumens	% Luminaire
0-30	1044	26.67
0-40	1702	43.46
0-60	2983	76.19
0-90	3915	100.00

Coefficients of Utilization

EFFECTIVE FLOOR CAVITY REFLECTANCE 20 PER (pfc=0.20)

pcc	80			70			50	
pw	70	50	30	70	50	30	50	30
RCR								
0	1.19	1.19	1.19	1.16	1.16	1.16	1.11	1.11
1	1.09	1.04	1.00	1.06	1.02	.98	.97	.94
2	.99	.92	.85	.97	.90	.83	.86	.81
3	.91	.81	.73	.88	.79	.72	.76	.70
4	.84	.72	.64	.82	.71	.63	.68	.61
5	.77	.65	.56	.75	.63	.55	.61	.54
6	.71	.58	.49	.69	.57	.48	.55	.48
7	.65	.52	.43	.64	.51	.43	.49	.42
8	.61	.47	.39	.59	.46	.38	.45	.38
9	.56	.43	.35	.55	.42	.34	.41	.34
10	.52	.39	.31	.51	.38	.31	.37	.30

2AVE Arioso recessed LED

4'x4'

Arioso Recessed LED Ribbed Acrylic 2x4, 4300 nominal lumens — LER – 110

Catalog No.	2AVEG43L840-4-ACR
Test No.	31665
S/MH	1.3
Lamp Type	LED
Lumens/Lamp	4293
Input Watts	39.2

Comparative yearly lighting energy cost per 1000 lumens – **$2.18** based on 3000 hrs. and $.08 pwr KWH.

Candlepower

Angle	End	45	Cross
0	1478	1478	1478
5	1477	1489	1433
10	1454	1472	1420
15	1415	1437	1387
20	1359	1387	1348
25	1288	1329	1295
30	1202	1258	1233
35	1102	1174	1163
40	992	1084	1085
45	872	983	997
50	749	877	906
55	627	767	810
60	509	660	716
65	398	556	618
70	297	458	524
75	207	366	430
80	127	272	304
85	61	145	123

Light Distribution

Degrees	Lumens	% Luminaire
0–30	1147	26.74
0–40	1868	43.57
0–60	3271	76.29
0–90	4288	100.00

Coefficients of Utilization

EFFECTIVE FLOOR CAVITY REFLECTANCE 20 PER (pfc=0.20)

pcc	80			70			50	
pw	70	50	30	70	50	30	50	30
RCR								
0	1.19	1.19	1.19	1.16	1.16	1.16	1.11	1.11
1	1.09	1.04	1.00	1.06	1.02	.98	.97	.94
2	.99	.92	.85	.97	.90	.83	.86	.81
3	.91	.81	.73	.88	.79	.72	.76	.70
4	.84	.72	.64	.82	.71	.63	.68	.62
5	.77	.65	.56	.75	.63	.55	.61	.54
6	.71	.58	.49	.69	.57	.49	.55	.48
7	.65	.52	.43	.64	.51	.43	.50	.42
8	.61	.47	.39	.59	.46	.38	.45	.38
9	.56	.43	.35	.55	.42	.34	.41	.34
10	.52	.39	.31	.51	.38	.31	.37	.30

Arioso Recessed LED Ribbed Acrylic 2x4, 4900 nominal lumens — LER – 110

Catalog No.	2AVEG49L840-4-ACR
Test No.	31666
S/MH	1.3
Lamp Type	LED
Lumens/Lamp	4854
Input Watts	44.1

Comparative yearly lighting energy cost per 1000 lumens – **$2.16** based on 3000 hrs. and $.08 pwr KWH.

Candlepower

Angle	End	45	Cross
0	1667	1667	1667
5	1668	1683	1610
10	1642	1663	1594
15	1597	1623	1556
20	1533	1565	1515
25	1451	1499	1456
30	1352	1417	1387
35	1238	1321	1309
40	1113	1217	1221
45	978	1102	1122
50	841	980	1021
55	704	856	914
60	571	735	808
65	447	617	697
70	334	508	592
75	234	403	484
80	146	298	326
85	71	150	125

Light Distribution

Degrees	Lumens	% Luminaire
0–30	1292	26.66
0–40	2104	43.39
0–60	3678	75.87
0–90	4848	100.00

Coefficients of Utilization

EFFECTIVE FLOOR CAVITY REFLECTANCE 20 PER (pfc=0.20)

pcc	80			70			50	
pw	70	50	30	70	50	30	50	30
RCR								
0	1.19	1.19	1.19	1.16	1.16	1.16	1.11	1.11
1	1.09	1.04	.99	1.06	1.02	.97	.97	.94
2	.99	.91	.85	.97	.89	.83	.86	.80
3	.91	.80	.72	.88	.79	.71	.76	.70
4	.84	.72	.63	.82	.71	.63	.68	.61
5	.77	.64	.56	.75	.63	.55	.61	.54
6	.71	.58	.49	.69	.57	.48	.55	.48
7	.65	.52	.43	.64	.51	.43	.49	.42
8	.61	.47	.39	.59	.46	.38	.45	.38
9	.56	.43	.34	.55	.42	.34	.41	.34
10	.52	.39	.31	.51	.38	.31	.37	.30

2AVE Arioso recessed LED

4'x4'

Arioso Recessed LED Ribbed Acrylic 2x4, 7400 nominal lumens **LER – 99**

Catalog No.	2AVEG74L840-4-ACR
Test No.	31667
S/MH	1.3
Lamp Type	LED
Lumens/Lamp	7400
Input Watts	74.9

Comparative yearly lighting energy cost per 1000 lumens – **$2.42** based on 3000 hrs. and $.08 pwr KWH.

Candlepower

Angle	End	45	Cross
0	2560	2560	2560
5	2563	2587	2468
10	2523	2556	2446
15	2453	2495	2390
20	2355	2406	2325
25	2229	2306	2236
30	2078	2180	2130
35	1902	2034	2013
40	1711	1875	1879
45	1504	1698	1728
50	1291	1512	1573
55	1081	1322	1409
60	876	1137	1245
65	686	956	1077
70	512	783	914
75	357	626	745
80	220	460	492
85	105	220	180

Light Distribution

Degrees	Lumens	% Luminaire
0-30	1986	26.87
0-40	3234	43.76
0-60	5659	76.56
0-90	7392	100.00

Coefficients of Utilization

EFFECTIVE FLOOR CAVITY REFLECTANCE 20 PER (pfc=0.20)

pcc	80			70			50	
pw	70	50	30	70	50	30	50	30
RCR								
0	1.19	1.19	1.19	1.16	1.16	1.16	1.11	1.11
1	1.09	1.04	1.00	1.06	1.02	.98	.98	.95
2	1.00	.92	.85	.97	.90	.84	.86	.81
3	.91	.81	.73	.89	.79	.72	.76	.70
4	.84	.72	.64	.82	.71	.63	.69	.62
5	.77	.65	.56	.75	.64	.55	.61	.54
6	.71	.58	.49	.69	.57	.49	.55	.48
7	.65	.52	.43	.64	.51	.43	.50	.42
8	.61	.47	.39	.59	.46	.38	.45	.38
9	.56	.43	.35	.55	.42	.34	.41	.34
10	.52	.39	.31	.51	.39	.31	.38	.30

Catolog Number	Delivered Lumens	Input Watts	Efficacy lm/W	8'x8' avg fc	8'x8' W/ sq ft	8'x10' avg fc	8'x10' W/ sq ft
2AVEG38L840-4-ACR	3920	40.3	97	61.2	0.63	48.9	0.50
2AVEG43L840-4-ACR	4293	39.2	110	67.0	0.61	53.6	0.49
2AVEG49L840-4-ACR	4854	44.1	110	75.8	0.69	60.6	0.55
2AVEG74L840-4-ACR	7400	74.9	99	115.5	1.17	92.4	0.94

Day-Brite CFI

Industrial

FluxSpace

FLP 2', 3', 4', 8'



Day-Brite / CFI FluxSpace LED Linear is a product that is perfect for a wide range of applications. Featuring a small form factor with a wide range of lumen packages and optical distributions, there is an abundance of both value and performance. FluxSpace contains features, options, and accessories, including scalable Interact controls, that allow it to fit into areas from education to warehousing.

Project:

Location:

Cat.No:

Type: C

Lumens: Qty:

Notes:

Ordering guide

example: FLP440L840-R-UNV-DIM

Family	Length	Lumens[1] (nom.)	Efficacy	CRI / CCT	Lens / Optics	Voltage	Driver	Options
FLP	4	40		835 -	Q -	UNV -	-	
FLP FluxSpace	**2** 2ft	**20L** 2,000lm **30L** 3,000lm **40L** 4,000lm **45L** 4,500lm **50L** 5,000lm **60L** 6,000lm	**Blank** Standard **HE**[3] High Efficacy	**830** 80CRI, 3000K **835** 80CRI, 3500K **840** 80CRI, 4000K **850** 80CRI, 5000K **930** 90CRI, 3000K **935** 90CRI, 3500K **940** 90CRI, 4000K **9TW**[4,5] Tunable 90CRI, 2700K-6500K	**R** Round Frosted Lens **Q** Square Frosted Lens **U** Wide Uplight Frosted Lens **L** No Lens **N** Narrow Optic (No Lens) **A** Aisle Optic (No Lens)	**UNV** Universal Voltage, 120-277V **120** 120V **208** 208V **240** 240V **277** 277V **347** 347V	**DIM** Dimming (0-10V) **DALI**[5] DALI **DTW**[5] DALI controlled tunable white	**SWZCS/E**[6,7] Interact Pro scalable sensor w/integral daylight & occupancy sensing, advanced grouping w/dwell time (mounted on fixture end cap) **SWZCS/S**[6,8] Interact Pro scalable sensor w/integral daylight & occupancy sensing, advanced grouping w/ dwell time (side mounted on fixture housing side) **SWZCSH**[6,9] Interact Pro scalable high bay sensor w/integral daylight & occupancy sensing, advanced grouping w/ dwell time **IAOSB/E**[6,7] Interact Pro RF sensor, enables wireless connected lighting control (mounted on fixture end cap) **IAOSB/S**[6,8] Interact Pro RF sensor, enables wireless connected lighting control (side mounted on fixture housing side) **RADIO/E**[6,7] Interact Office advanced wireless sensor bundle, integral SC1500 w/IoT capabilities for enterprise scale projects (mounted on fixture end cap) **RADIO/S**[6,8] Interact Office advanced wireless sensor bundle, integral SC1500 w/IoT capabilities for enterprise scale projects (side mounted on fixture housing side) **MD360**[9,10] 360° Motion detector (ON/OFF) **MD360D**[9,10] 360° Motion detector (ON/DIM to 10%) **EM06**[11] Factory wired 6W Bodine integral emergency pack, nominal 750 to 880 lumens **EM10**[11] Factory wired 10W Philips Bodine integral emergency pack, nominal 1300 to 1500 lumens **ER100**[12] UL924 listed sensor bypass relay, factory installed between driver & sensor (Interact Pro compatible) **ER100/HVPS**[12] UL924 listed sensor bypass relay, factory installed between driver & sensor for 347V Power Sense (Interact Pro compatible) - not available in 2ft **ER100/HVPI**[12] UL924 listed sensor bypass relay, factory installed between driver & sensor for 347V Power Interrupt (Interact Pro compatible) - not available in 2ft **GTD/E**[13] UL924 listed Bodine GTD factory installed on driver input (Note: ONLY available in 120V OR 277V) **PU(xx)** Power Connect options for through-wire connections may be ordered factory installed. See page (5) for more information (4ft and 8ft units only) **BAC**[14] Meet the requirements of the Buy American Act of 1933 (BAA) **BABAF**[14] Meets the requirements of the Build America Buy America Act for projects funded through FHWA that are obligated before October 1, 2026, and meets the Buy America preferences for FTA
	3 3ft	**30L** 3,000lm **37L** 3,700lm **45L** 4,500lm **50L** 5,000lm **60L** 6,000lm						
	4 4ft	**30L** 3,000lm **40L** 4,000lm **50L** 5,000lm **60L** 6,000lm **70L** 7,000lm **80L** 8,000lm **90L** 9,000lm **100L** 10,000lm **120L**[2] 12,000lm						
	8 8ft	**60L** 6,000lm **80L** 8,000lm **100L** 10,000lm **120L** 12,000lm **140L** 14,000lm **160L** 16,000lm **180L** 18,000lm **200L** 20,000lm **240L**[2] 24,000lm						

1. Nominal delivered lumens at 25°C ambient. Other lumen packages may be ordered in increments of 500lm up to maximum listed lumens for 2', 3', or 4' units and increments of 1000lm up to maximum listed lumens for 8' unit.
2. Not available with Interact options (**SWZCS/E**, **SWZCS/S**, **SWZCSH**, **IAOSB**, or **RADIO**).
3. Not available in 2ft 6000lm, 4ft 12000lm, or 8ft 24000lm.
4. Not available with Narrow, Wide, or Aisle Optic options (6000lm maximum configurations only).
5. ETO ready (consult factory for lead times).
6. Must order **IRT9015** Interact commissioning remote with each system order, and available with **DIM** driver option only.
7. Sensor mounted on fixture end cap (see page 6 for details).
8. Sensor mounted on fixture housing side (see page 6 for details). Not available in any 2' unit with any emergency option.
9. High bay motion detector, motion sensing zone is extremely limited if used below 15' mounting height.
10. Not for use with SWZCS or SWZCSH option.
11. Not available in 2ft unit with 347V.
12. Must be installed in conjuction with a **UL1008** device (only used with **SWZCS** or **SWZCSH** integral sensing option).
13. Must be installed in conjuction with a UL1008 device (must specify voltage). Using Power Connect with the GTD/E option is ETO ready. Consult factory for lead times.
14. Failure to properly select the "BAC" suffix could result in you receiving product that is not BAA compliant product with no recourse for an RMA or refund. This BAC designation hereunder does not address (i) the applicability of, or availability of a waiver under, the Trade Agreements Act, or (ii) the "Buy America" domestic content requirements imposed on states, localities, and other non-federal entities as a condition of receiving funds administered by the Department of Transportation or other federal agencies. Genlyte's products with a BAC option code designation are manufactured in the US and utilize a BAA COTS exemption rule for compliance. "BABAF" designates the product will meet the standards set by FHWA for BABA and FTA for Buy America. As noted, for FHWA BABA compliance, applicable projects must be funded by October 1, 2026.

General notes

Many luminaire components, such as reflectors, refactors, lenses, sockets, lampholders, and LEDs are made from various types of plastics which can be adversely affected by airborne contaminants. If sulfur based chemicals, petroleum based products, cleaning solutions, or other contaminants are expected in the intended area of use, consult factory for compatibility.

Note: Not all product variations listed on this page are DLC qualified.
To ensure that a specific model is qualified, visit www.designlights.org/search.

FLP FluxSpace Linear

2', 3', 4' & 8'

Accessories

Remote



Chain hanger set

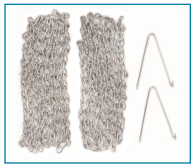

Cable hanger set

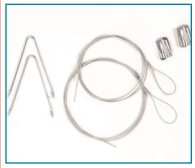

Row joiner



Wire guard

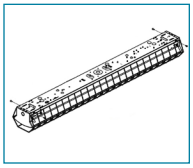

Cable hanger kit

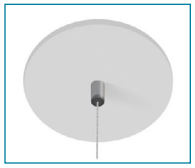

Cable hanger kit w/cord



No Lens end cap

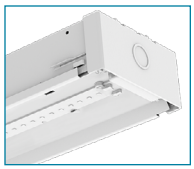

Round end cap

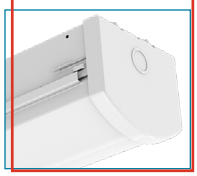

Square end cap

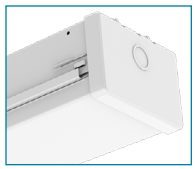

Uplight end cap



Round lens

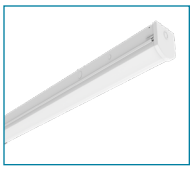

Square lens

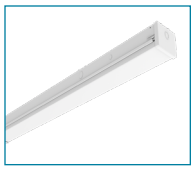

Uplight lens

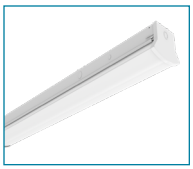

Accessories (order separately)

Catalog Numbers	Descriptions	Notes
HCH5-VHOOK	5' Cable hanger set (pair) – Includes two 5' hanging cables with "V" hooks	
HCH10-VHOOK	10' Cable hanger set (pair) – Includes two 10' hanging cables with "V" hooks	
HCH15-VHOOK	15' Cable hanger set (pair) – Includes two 15' hanging cables with "V" hooks	
HCH20-VHOOK	20' Cable hanger set (pair) – Includes two 20' hanging cables with "V" hooks	
HNH5-VHOOK	54" Chain hanger set (pair) – Includes two 54" heavy duty link chains with "V" hooks	
DACHxx	Adjustable cable hanger kit with canopy (single)	Works with 1/4" hole on base of housing or TH hanger bracket. xx = cable length in inches, enter 48" to 180" lengths in 12" increments
DACHxx-1-SC	Adjustable cable hanger kit with canopy and white straight 18/3 cord (single)**	
DACHxx-2-SC	Adjustable cable hanger kit with canopy and white straight 18/4 cord (single)**	
DACHxx-1D-SC	Adjustable cable hanger kit with canopy and white straight 18/5 cord (single)**	
DACHxx-1D-SC-EM	Adjustable cable hanger kit with canopy and white straight 18/6 cord (single)**	
FLP-J	Heavy duty internal row joiner	Ensure to order the appropriate center lens mullion when row mounting lensed fixtures
FLP-CMR	Round plastic center lens mullion to use when row mounting	
FLP-CMQ	Square plastic center lens mullion to use when row mounting	
FLP-CMU	Uplight plastic center lens mullion to use when row mounting	
FLP-WG2	2' Wire guard	Cannot be used with housing side mounted Interact sensors.
FLP-WG3	3' Wire guard	
FLP-WG4	4' Wire guard (order two for 8' models)	
FLP-ECL	No Lens plastic end cap - used for no lens and optic versions (set of two)	
FLP-ECR	Round plastic end cap (set of two)	
FLP-ECQ	Square plastic end cap (set of two)	
FLP-ECU	Uplight plastic end cap (set of two)	
FLP-R2L	2' Round lens	
FLP-R3L	3' Round lens	
FLP-R4L	4' Round lens - order two for 8' models	
FLP-Q2L	2' Square lens	
FLP-Q3L	3' Square lens	
FLP-Q4L	4' Square lens - order two for 8' models	
FLP-U2L	2' Uplight lens	
FLP-U3L	3' Uplight lens	
FLP-U4L	4' Uplight lens - order two for 8' models	
TH-1	Sliding hanger bracket, flush mounting (pair)	
TH-2	Sliding hanger bracket, 1-1/2" spacing (pair)	
IRT9015	SWZCS handheld remote for grouping and configuration (at least one remote required for any SWZCS installation)	

FLP FluxSpace Linear

2', 3', 4' & 8'

Models



No Lens or No Lens with Optic



Square with Frosted Lens



Round with Frosted Lens



Uplight with Frosted Lens

Specifications

Features

- Robust design for installation in new construction and renovated spaces.
- Available with CRI 80 or CRI 90 minimum color rendering.
- Easy access to LED boards and driver.
- Frosted acrylic diffuser options provide wide light distribution and superior glare control.
- Lengths of 2', 3', 4' and 8' available to accommodate many field applications.
- Up to 100,000 hour predicted L70 LED lumen maintenance provides long service life to reduce maintenance costs.
- Can be surface mounted on ceilings or walls, or suspended via chain, pendants or cables.
- Wall mountable - ADA compliant.
- Single piece plastic end caps provide finished aesthetic.
- Can handle cold applications (-20°C).
- Knock out of 7/8" provided at each end and on base of luminaire.
- Multiple driver options available with 0-10V as standard.
- Enclosed lens versions designed to minimize penetration of dust, insects, and other debris into the LED compartment.
- Tandem 8' unit is two 4' optical assemblies with a center mullion on a single full length chassis.
- FLP-J heavy duty row joiner is required for continuous row mounting. Use one FLP-J at each joint. Ensure to order the appropriate center lens mullion when row mounting lensed fixtures.
- Integral controls options include sensor mounted in control module extension mounted on fixture end or side.
- 5 year manufacturer's limited warranty. Visit https://www.genlyte.com/en-us/support/warranties for complete warranty information.

Finish

- Baked white acrylic matte high reflectance paint finish.

Shielding

- Contoured frosted acrylic lenses.
- Option to have lensless version for highest lumen output.
- Optical distributions available for lensless version to allow for best fit beam placement.

Electrical

- LED boards and drivers are RoHS (Restriction of Hazardous Substances) compliant. Total system life rated at 50,000 hours. Predicted L70 lifetime based on LED manufacturer's supplied LM-80 data and in-situ laboratory testing.
- Integral emergency driver with EMLED option. To estimate lumen output in emergency mode, multiply emergency pack wattage by efficacy, then by 1.10.
- The GTD/E option is used to bypass wall switches and allow luminaire operation on auxiliary power. Generator transfer requires installation in conjunction with a UL1008 listed device.

Materials

- Heavy gauge cold rolled steel housing and LED plate. ABS plastic injection molded end caps.

Labels

- cETLus listed to UL 1598 standards. Suitable for use in damp locations. See ambient temperature data table for standard ambient information.

Ambient Temperature Data

Maximum Ambient Table °C (minimum ambient -20°C)

Configuration	UNV	347	UNV w/ Interact	347 w/ Interact
FLP220L	50	45	45	45
FLP230L	50	45	45	45
FLP240L	45	45	45	45
FLP245L	45	45	45	40
FLP250L	40	40	40	40
FLP260L	40	40	40	40
FLP330L	50	50	40	40
FLP337L	45	45	40	40
FLP345L	45	45	40	40
FLP350L	40	40	40	40
FLP360L	40	40	40	40
FLP430L	45	45	45	45
FLP440L	45	45	45	45
FLP450L	45	45	45	45
FLP460L	40	40	40	40
FLP470L	30	30	30	30
FLP480L	30	30	30	30
FLP490L	30	30	30	30
FLP4100L	30	30	30	30
FLP4120L	35	35		
FLP860L	45	45	40	40
FLP880L	45	45	40	40
FLP8100L	40	40	40	40
FLP8120L	40	40	40	40
FLP8140L	30	30	30	30
FLP8160L	30	30	30	30
FLP8180L	30	30	30	30
FLP8200L	30	30	30	30
FLP8240L	35	35		
Any unit with EM06, EM10, or GTD/E (min. 0°C)	30	30	30	30

FLP FluxSpace Linear

2', 3', 4' & 8'

Dimensions

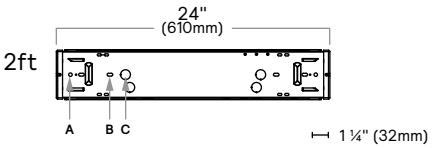

A. 5/16" dia. hole (2 places)
B. 1/2" x 1/4" slotted hole (4 places)
C. 7/8" dia. K.O. (4 places)



A. 5/16" dia. hole (2 places)
B. 1/2" x 1/4" slotted hole (2 places)
C. 7/8" dia. K.O. (4 places)

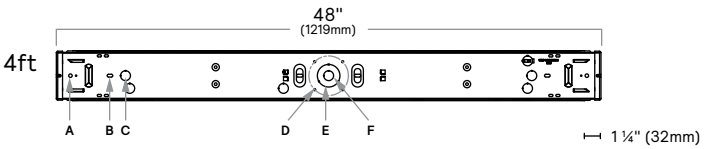

A. 5/16" dia. hole (2 places)
B. 1/2" x 1/4" slotted hole (4 places)
C. 7/8" dia. K.O. (6 places)
D. 3/16" dia. holes on 3 ½" dia. circle
E. 2" dia. K.O.
F. 7/8" dia. K.O.

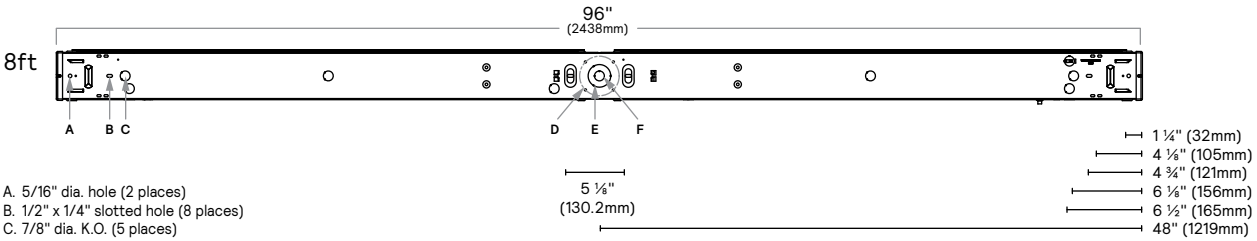

A. 5/16" dia. hole (2 places)
B. 1/2" x 1/4" slotted hole (8 places)
C. 7/8" dia. K.O. (5 places)
D. 3/16" dia. holes on 3 ½" dia. circle
E. 2" dia. K.O.
F. 7/8" dia. K.O.

No Lens

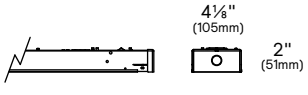

Square lens

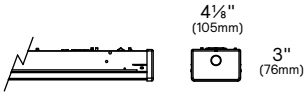

Round lens

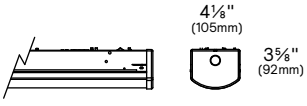

Uplight lens

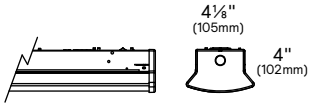

FLP FluxSpace Linear

2', 3', 4' & 8'

Electro-Connect Modular Wiring System

Features

Electro-Connect is a pre-assembled modular wiring system designed to simplify the process of wiring and installing fixtures ultimately providing time and cost savings. With only three basic components, EC can be used to supply power in both high bay and low bay applicaions. For more information, visit us online at https://www.genlyte.com/en-us/products/indoor-luminaires/modular-wiring/wiring-devices/day-brite-cfi/electro-connect-ec-three/LP_CF_ECAC03_EU/family and https://www.genlyte.com/en-us/products/indoor-luminaires/modular-wiring/wiring-devices/day-brite-cfi/electro-connect-ec-three-plus/LP_CF_ECAC33_EU/family.

EC3 Modular Wiring System

Distribution Cable



Extender Cable

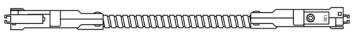

Lighting 'T'

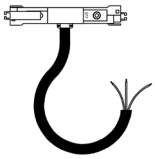

EC3+ Modular Wiring System

Double Headed Extender Cable

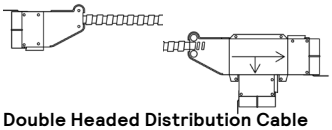

Double Headed Distribution Cable

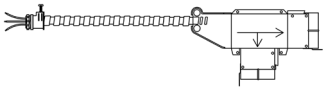

Whip End Fixture Drop



Power Connect Modular Wiring System

Features

- Internal wiring harness for feed-thru row mounted applications factory installed in luminaire.
- Modular connection makes installation quick and easy.
- Round 600V rated 6-pin male connector at one end and female connector at opposite end. Simply plug together.
- Thru conductors are 12ga stranded, 90°C THHN, 600V rated.
- Internal component conductors are 18ga solid, 90°C TFN, 600V rated.
- Luminaire comes assembled with joiner bracket at one end and lens mullion connector (if lensed version) installed.
- End caps for the rows must be ordered as separate accessory items. See detailed accessory list on page 1.
- For luminaires with emergency devices installed, the black lead will be factory connected to the driver, and the red lead will factory connected as unswitched hot to the emergency device.

Attention

- Always make initial power feed at the male connector end of the first luminaire. It is best to have the female connector at the end of the luminaire run.
- Using Power Connect with the GTD/E option is ETO ready. Consult factory for lead times.



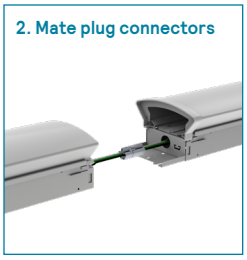



Option code suffix to luminaire catalog number

Family	Voltage	Circuits/Wiring	Luminaire Length
P	U		
P Power connect	**U** Universal voltage 120-480V	**1** One circuit (black, white, green) **2** Two circuit or emergency (black, red, white, green)	**4** 4' luminaire **4D** 4' luminaire with additional dimming leads (purple, pink) **8** 8' luminaire **8D** 8' luminaire with additional dimming leads (purple, pink)

Note: Option code suffix to luminaire catalog number.

FLP FluxSpace Linear

2', 3', 4' & 8'

Wireless Controls options

Emergency Options (ER100)

- Power Sensing (Factory default) – Recommended UL924 option requires unswitched power sense line, absence of voltage on the normal circuit triggers luminaire to 100% output.
- Power Interruption Detection (Field option) – Detects AC power interruption >30ms triggers 90 minute emergency mode with luminaire at 100% output.
- 347V requires step-down transformer and must be ordered indicating Power Sensing or Power Interruption Detection.

Radio only sensor (RADIO)

- Integral RADIO only sensor simply enables wireless mesh connectivity to the luminaire without any occupancy or daylight sensing.
- Ideal for applications where sensing functionality is managed by other Interact devices and the luminaire only needs to have wireless connectivity.

Interact Pro scalable sensor for Foundation, Advanced & Enterprise tiers

(SWZCS/SWZCSH and an evolution of SpaceWise)

- SWZCS/SWZCSH is a connected sensor with integral occupancy and daylight sensing and supports wireless mesh connectivity.
- The sensor works in the Foundation mode (similar to SpaceWise) when configured without a gateway or in an Interact Pro Advanced or Enterprise mode if a compatible gateway is used.
- Interact Pro includes an App, a portal and a broad portfolio of wireless luminaires, lamps and retrofit kits all working on the same system.
- Startup is implemented via Interact Pro App (Android or iPhone) & BlueTooth connectivity. The App provides flexibility to choose between a gateway or non gateway mode for setup.
- Setup with the gateway requires wired internet access to the gateway. It is possible to add a gateway at a later point.
- Prepare project configuration steps remotely and use IRT9015 remote onsite to identify and group devices together.
  - Compatible with:
    - UID8451/10 wireless dimmer switch
    - SWS200 wireless scene switch
    - Battery powered IP42 presence sensor OCC sensor IA CM WH 10/1
    - Battery powered IP42 presence & daylight sensor OCC-DL sensor IA CM IP42 WH
    - Battery powered IP65 presence sensor OCC sensor IA CM IP65 WH
    - Battery powered IP65 presence & daylight sensor OCC-DL sensor IA CM IP65 WH
- For more information on Interact Pro visit: www.interact-lighting.com/interactproscalablesystem

Interact Pro scalable sensor bundles for Enterprise tier

- IAOSB option in addition to occupancy and daylight sensing supports advanced IoT capabilities such as people estimation analysis, desk level temperature & humidity sensing, noise classification, and BLE beacon.
- Compatible with UID8451/10 wireless dimmer switch, SWS200 wireless scene switch, wireless Occ sensor (OCC SENSOR IA CM IP42 WH 10/1) and wireless Day/Occ sensor (OCC MULTI SENSOR IA CM WH 10/1) and wireless Occupancy or Daylight & Occupancy sensors available.
- Use Interact software and insights to increase building efficiency, achieve building wide integration and optimize space through occupancy analytics.
- Requires compatible Gateway and internet connectivity for commissioning.
- For more information, visit: www.interact-lighting.com/office or www.usa.lighting.philips.com/systems/system-areas/offices

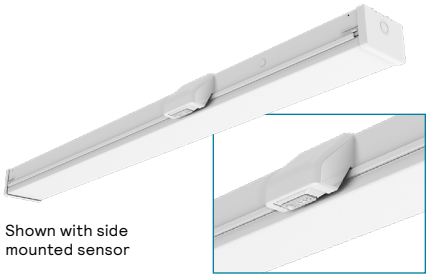

Shown with side mounted sensor

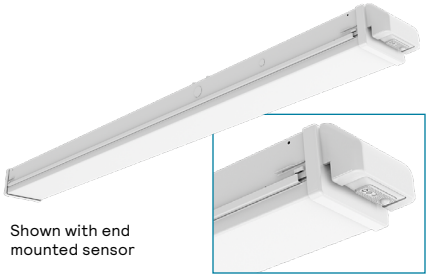

Shown with end mounted sensor

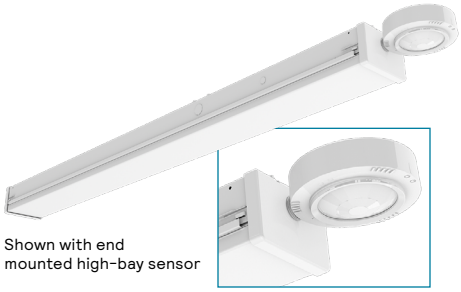

Shown with end mounted high-bay sensor

Signify interact

Easy. Effective. Smart.

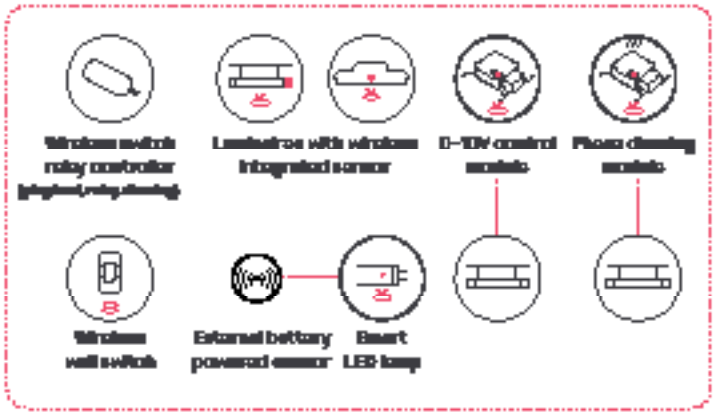

Meet Interact

A smart, wireless luminaire level lighting control system (LLLC). A complete solution that combines modern and intuitive technologies for easy installation and specification.

- **Works with or without gateway**
- **No IT**
- **No light point restrictions**
- **Up to 75% out of the box savings**
- **Fast & easy**
- **Code & rebates compliant**

Capabilities

- Luminaire integrated occupancy and daylight sensing
- BMS integration
- Human-centric lighting
- Connectivity & insights
- Full Automation*
- Security

*Grouping, zoning, dimming, high-end trimming, scenes, scheduling, manual controls

Benefits

Up to 80% installation savings[1]
Compared to installation costs of wired systems

Up to 5 min faster setup time[2]
Compared to similar wireless systems

Less than 2 year payback
Implement deep energy-saving strategies and claim utility rebates

1.8x more energy savings
Compared to conventional control systems

Up to 2x utility rebates
Network Interact ready devices and get more utility rebates[3]

1. Versus legacy systems based on installer interviews
2. Based on installer analysis done by Signify for a typical multi-zone space
3. Utility programs across US

Just lights and an App



1. **Install the Interact ready fixtures with embedded smart sensor**
2. **Install the wireless wall switch**
3. **Configure your setup with the Interact App**
4. **Leverage the IRT9015 remote accessory to accelerate your setup process**
6. **Optionally add a gateway for insights and management**

Learn more about Interact:

Interact includes an app, a web portal, and a comprehensive range of Interact ready wireless luminaires, lamps, retrofit kits, and control devices like switches and sensors that operate within the same system.

Controls Options

Interact radio node for Standalone, Gateway & Gateway + IoT tiers (RA)

- RA sensor option is a connected radio node supporting wireless mesh connectivity.
- Compatible with standalone and gateway modes of Interact.

Interact occupancy & daylight sensor for Standalone, Gateway & Gateway + IoT tiers (CS)

- The CS sensor option is a connected sensor with built-in occupancy and daylight detection, along with wireless mesh connectivity.
- Compatible with standalone and gateway modes of Interact.

Interact advanced sensor bundle for Gateway + IoT tier (SB)

- SB sensor option offers occupancy and daylight sensing and supports advanced IoT capabilities, such as desk-level temperature and humidity monitoring, noise classification, and Bluetooth Low Energy (BLE) beacon functionality.
- Setup requires a compatible gateway and internet connectivity.
- With compatible gateway and software analytics, SB sensor option enables greater building efficiency, seamless system integration, and optimized space utilization through occupancy and environmental insights.

Interact for intelligent buildings sensor option codes across Genlyte product lines*				
	Sensor part #	Daybrite	Ledalite	Lightolier
Zigbee + Bluetooth	SCTDOB	RADIO	RA	RA
Zigbee + Bluetooth + Sensing	SC2OOB	SWZCS	CS	SBA or SWCS accessory
Zigbee + Bluetooth + Sensing + Environmental data	SC1500	IADSB	SB	SBA or SWCS accessory
Zigbee + Highbay + Bluetooth + Sensing	SMHZIO IA	SWZCSH	–	–

FLP FluxSpace Linear

2', 3', 4' & 8'

Adjustment Factors			
CRI/CCT	Lumen Multiplier	CRI/CCT	Lumen Multiplier
80CRI/3000K	0.94	90CRI/3000K	0.89
80CRI/3500K	0.96	90CRI/3500K	0.91
80CRI/4000K	1.00	90CRI/4000K	0.95
80CRI/5000K	1.00		

Photometric Test List

		Round lens			Square lens			Uplight lens			No lens		Narrow optic		Wide optic		Aisle optic	
Ordering Code	Input Watts	Lumens	Efficacy	Uplight%	Lumens	Efficacy	Uplight%	Lumens	Efficacy	Uplight%	Lumens	Efficacy	Lumens	Efficacy	Lumens	Efficacy	Lumens	Efficacy
FLP220L840	**13.8**	1927	140	6.8	1941	141	3.9	1917	139	9.7	2113	153	1988	144	1993	144	1997	145
FLP220LHE840	**13.4**	1978	148	6.8	1983	148	4.0	1957	146	9.6	2162	161	2052	153	2051	153	2049	153
FLP230L840	**22.3**	2940	132	6.9	2961	133	3.9	2925	131	9.7	3224	145	3034	136	3041	136	3047	137
FLP230LHE840	**21.4**	3078	144	6.9	3086	144	4.0	3046	142	9.6	3364	157	3193	149	3192	149	3189	149
FLP240L840	**28.8**	4012	139	6.9	3993	139	4.1	3975	138	9.9	4332	150	4083	142	4119	143	4102	142
FLP240LHE840	**27.8**	4084	147	7.1	4047	146	4.1	4052	146	9.7	4495	162	4203	151	4222	152	4194	151
FLP245L840	**33.5**	4557	136	6.9	4535	135	4.1	4515	135	9.9	4920	147	4637	138	4678	140	4659	139
FLP245LHE840	**32.3**	4687	145	7.1	4645	144	4.1	4650	144	9.7	5159	160	4824	149	4845	150	4813	149
FLP250L840	**37.9**	5028	133	6.9	5004	132	4.1	4982	131	9.9	5430	143	5117	135	5163	136	5141	136
FLP250LHE840	**36.1**	5110	142	7.1	5065	140	4.1	5071	140	9.7	5625	156	5260	146	5283	146	5248	145
FLP260L840	**43.9**	6129	140	7.0	6074	138	4.1	6081	139	9.7	6746	153	6309	144	6336	144	6294	143
FLP330L840	**20.3**	3084	152	6.6	3064	152	3.6	3061	152	9.2	3285	162	3085	152	3127	155	3098	153
FLP330LHE840	**19.8**	3082	156	6.7	3062	155	3.9	3075	155	9.3	3319	168	3083	155	3121	158	3107	157
FLP337L840	**25.3**	3791	150	6.6	3767	149	3.6	3763	149	9.2	4038	160	3792	150	3844	152	3808	151
FLP337LHE840	**24.6**	3810	155	6.7	3784	154	3.9	3801	155	9.3	4103	167	3811	155	3858	157	3841	156
FLP345L840	**31.1**	4572	147	6.6	4533	146	3.6	4564	147	9.4	4896	157	4573	147	4599	148	4575	147
FLP345LHE840	**30.2**	4637	154	6.8	4575	151	3.8	4625	153	9.5	4989	165	4621	153	4672	155	4656	154
FLP350L840	**35.3**	5055	143	6.6	5012	142	3.6	5047	143	9.4	5414	153	5057	143	5085	144	5059	143
FLP350LHE840	**34.2**	5146	150	6.8	5078	148	3.8	5133	150	9.5	5537	162	5129	150	5185	152	5167	151
FLP360L840	**42.6**	5960	140	6.6	5909	139	3.6	5950	140	9.4	6382	150	5961	140	5995	141	5964	140
FLP360LHE840	**41.4**	6161	149	6.8	6079	147	3.8	6145	149	9.5	6629	160	6140	149	6208	150	6186	150
FLP430L840	**20.0**	3039	152	6.6	2999	150	5.3	3065	153	10.9	3239	161	3047	152	3084	153	3079	154
FLP430LHE840	**19.6**	3106	158	6.6	3070	157	4.9	3111	159	10.4	3290	168	3105	158	3134	160	3125	159
FLP440L840	**27.0**	3973	147	6.6	3920	145	5.3	4006	148	10.9	4234	157	3983	148	4031	149	4025	149
FLP440LHE840	**26.2**	4096	156	6.6	4048	154	4.9	4101	157	10.4	4338	166	4094	156	4132	158	4120	157
FLP450L840	**34.1**	4862	143	6.6	4797	141	5.3	4903	144	10.9	5181	152	4874	143	4933	145	4926	144
FLP450LHE840	**32.9**	5055	154	6.6	4996	152	4.9	5062	154	10.4	5354	163	5053	154	5100	155	5085	155
FLP460L840	**40.8**	6076	149	6.6	5929	145	4.3	6003	147	9.8	6401	157	6050	148	6058	148	6057	148
FLP460LHE840	**39.6**	6164	156	6.6	5964	151	4.7	6061	153	10.1	6523	165	6088	154	6145	155	6122	155
FLP470L840	**48.2**	7031	146	6.6	6860	142	4.3	6946	144	9.8	7407	154	7001	145	7010	146	7009	146
FLP470LHE840	**46.6**	7200	155	6.7	6966	149	4.7	7080	152	10.1	7620	163	7112	153	7178	154	7151	153
FLP480L840	**56.5**	8042	143	6.6	7847	139	4.3	7945	141	9.8	8472	150	8008	142	8019	142	8017	142
FLP480LHE840	**54.5**	8318	153	6.7	8048	148	4.7	8179	150	10.1	8803	162	8216	151	8293	152	8261	152
FLP490L840	**65.7**	9015	137	6.6	8839	135	4.3	8955	136	9.8	9556	145	9026	137	9061	138	9082	138
FLP490LHE840	**63.2**	9389	149	6.7	9152	145	4.7	9318	147	10.1	10056	159	9353	148	9436	149	9405	149
FLP4100L840	**74.4**	10033	135	6.6	9837	132	4.3	9966	134	9.8	10635	143	10045	135	10084	135	10107	135
FLP4100LHE840	**71.7**	10531	148	6.7	10265	143	4.7	10451	146	10.1	11279	157	10491	146	10584	148	10549	147
FLP4120L840	**83.1**	12002	146	6.7	11629	140	4.6	11831	142	10.3	12823	154	12010	144	12110	145	12108	145
FLP860L840	**40.0**	6121	154	6.6	6039	152	5.3	6173	154	10.9	6523	163	6137	153	6211	155	6202	155
FLP860LHE840	**39.0**	6256	160	6.6	6184	159	4.9	6265	161	10.4	6627	170	6254	160	6313	162	6294	161
FLP880L840	**53.7**	8002	149	6.6	7895	147	5.3	8069	150	10.9	8527	159	8022	149	8119	151	8107	151
FLP880LHE840	**52.1**	8249	158	6.6	8153	156	4.9	8260	159	10.4	8737	168	8246	158	8323	160	8298	159
FLP8100L840	**67.9**	9792	144	6.6	9661	142	5.3	9874	145	10.9	10435	154	9817	145	9936	146	9920	146
FLP8100LHE840	**65.5**	10181	155	6.6	10062	154	4.9	10195	156	10.4	10784	165	10177	155	10272	157	10242	156
FLP8120L840	**81.2**	12237	151	6.6	11940	147	4.3	12090	149	9.8	12892	159	12186	150	12201	150	12200	150
FLP8120LHE840	**78.8**	12415	158	6.6	12011	152	4.7	12208	155	10.1	13138	167	12262	156	12377	157	12330	156
FLP8140L840	**95.9**	14160	148	6.6	13817	144	4.3	13990	146	9.8	14918	156	14101	147	14119	148	14117	148
FLP8140LHE840	**92.7**	14502	157	6.7	14031	151	4.7	14260	154	10.1	15347	165	14324	155	14458	156	14403	155
FLP8160L840	**112.4**	16197	144	6.6	15804	141	4.3	16003	142	9.8	17064	152	16129	143	16150	144	16148	144
FLP8160LHE840	**108.5**	16753	154	6.7	16209	149	4.7	16474	152	10.1	17730	163	16548	153	16702	154	16639	153
FLP8180L840	**130.7**	18156	139	6.6	17803	136	4.3	18036	138	9.8	19247	147	18179	139	18250	140	18292	140
FLP8180LHE840	**125.8**	18910	150	6.7	18432	147	4.7	18766	149	10.1	20253	161	18838	150	19005	151	18942	151
FLP8200L840	**148.1**	20206	136	6.6	19813	134	4.3	20073	136	9.8	21420	144	20232	136	20310	137	20358	137
FLP8200LHE840	**142.7**	21211	149	6.7	20675	145	4.7	21050	148	10.1	22718	159	21130	148	21317	149	21247	149
FLP8240L840	**165.6**	24173	147	6.7	23421	142	4.6	23828	144	10.3	25827	156	24189	146	24390	147	24386	147

FLP FluxSpace Linear

2', 3', 4' & 8'

Photometry

FLP430L840-A-UNV-DIM

Luminaire Lumens	3079
Luminaire Efficacy Rating (LER)	154
Total Luminaire Watts	20.0
Spacing Criterion (0-180)	1.44
Spacing Criterion (90-270)	1.72

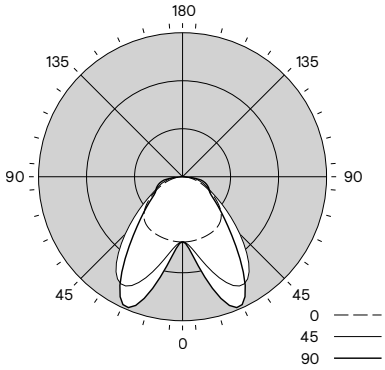

Candela Distribution						Flux
	0	22.5	45	67.5	90	Lumens
0	678	678	678	678	678	
5	679	691	713	736	748	71
15	671	764	958	1131	1204	273
25	659	872	1251	1434	1470	527
35	635	927	1209	1109	1043	634
45	571	798	846	665	617	561
55	433	552	504	404	389	422
65	277	326	301	292	304	302
75	146	181	195	222	244	210
85	41	68	82	80	83	80
90	5	4	4	2	2	

Zonal Lumen Summary			
Zone	Lumens	%Fixture	%Lamp
0-30	870	28.3%	28.3%
0-40	1504	48.9%	48.9%
0-60	2487	80.8%	80.8%
0-90	3079	100.0%	100.0%

Avg. Luminance (cd/m²)			
	0	45	90
45	6707	9941	7255
55	6281	7306	5639
65	5447	5911	5974
75	4680	6273	7831
85	3911	7859	7888

Coefficients of Utilization % (Based on a floor reflectance of 0.2)											
Pc---	80				70			50			0
Pw---	70	50	30	10	70	50	30	50	30	10	0
RCR											
0	119	119	119	119	116	116	116	111	111	111	100
1	109	104	100	96	106	102	98	97	94	91	84
2	99	91	84	78	96	89	83	85	80	76	70
3	91	80	72	66	88	79	71	76	69	64	60
4	83	71	63	56	81	70	62	67	60	55	51
5	76	64	55	48	74	63	54	61	53	47	44
6	71	57	49	42	69	56	48	55	47	42	39
7	65	52	43	37	64	51	43	50	42	37	34
8	61	47	39	33	59	47	39	45	38	33	31
9	57	43	35	30	55	43	35	42	35	29	27
10	53	40	32	27	52	39	32	38	31	27	25

*Based on a floor reflectance of 0.2

FLP430L840-L-UNV-DIM

Luminaire Lumens	3239
Luminaire Efficacy Rating (LER)	161
Total Luminaire Watts	20.1
Spacing Criterion (0-180)	1.30
Spacing Criterion (90-270)	1.32

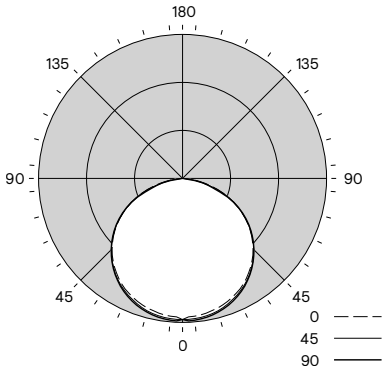

Candela Distribution						Flux
	0	22.5	45	67.5	90	Lumens
0	1078	1078	1078	1078	1078	
5	1057	1072	1075	1079	1087	102
15	1027	1042	1047	1048	1056	295
25	968	979	984	988	993	453
35	880	889	894	891	897	557
45	761	767	770	766	770	592
55	610	615	614	613	618	548
65	428	433	431	431	432	424
75	229	230	212	197	202	229
85	48	41	6	5	5	38
90	1	1	1	1	1	

Zonal Lumen Summary			
Zone	Lumens	%Fixture	%Lamp
0-30	851	26.3%	26.3%
0-40	1408	43.5%	43.5%
0-60	2547	78.7%	78.7%
0-90	3239	100.0%	100.0%

Avg. Luminance (cd/m²)			
	0	45	90
45	8948	9055	9056
55	8847	8905	8958
65	8421	8470	8500
75	7346	6809	6475
85	4550	525	429

Coefficients of Utilization % (Based on a floor reflectance of 0.2)											
Pc---	80				70			50			0
Pw---	70	50	30	10	70	50	30	50	30	10	0
RCR											
0	119	119	119	119	116	116	116	111	111	111	100
1	109	104	100	96	106	102	98	98	94	91	84
2	99	90	84	78	96	89	82	85	80	75	70
3	90	79	71	64	87	78	70	75	68	63	58
4	82	70	61	54	80	69	60	66	59	53	49
5	75	62	53	47	73	61	53	59	52	46	43
6	70	56	47	40	68	55	46	53	46	40	37
7	64	51	42	36	63	50	41	48	41	35	33
8	60	46	38	32	58	45	37	44	37	31	29
9	56	42	34	28	54	42	34	41	33	28	26
10	52	39	31	26	51	38	31	37	30	25	23

*Based on a floor reflectance of 0.2

FLP430L840-N-UNV-DIM

Luminaire Lumens	3047
Luminaire Efficacy Rating (LER)	152
Total Luminaire Watts	20.1
Spacing Criterion (0-180)	1.24
Spacing Criterion (90-270)	0.70

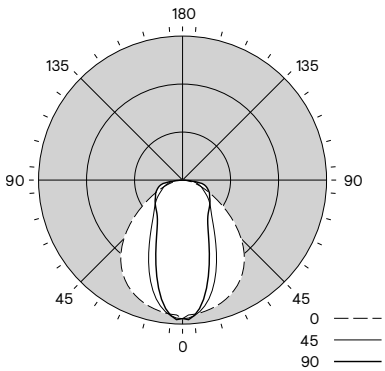

Candela Distribution						Flux
	0	22.5	45	67.5	90	Lumens
0	1732	1732	1732	1732	1732	
5	1683	1707	1701	1691	1699	159
15	1630	1587	1431	1290	1246	401
25	1521	1338	1002	814	768	495
35	1333	994	665	566	551	497
45	1037	669	496	471	475	463
55	673	446	387	397	417	398
65	367	285	284	336	369	316
75	167	171	205	261	303	231
85	45	69	88	86	93	88
90	5	5	4	3	2	

Zonal Lumen Summary			
Zone	Lumens	%Fixture	%Lamp
0-30	1055	34.6%	34.6%
0-40	1552	50.9%	50.9%
0-60	2413	79.2%	79.2%
0-90	3047	100.0%	100.0%

Avg. Luminance (cd/m²)			
	0	45	90
45	12191	5831	5587
55	9750	5610	6045
65	7209	5584	7266
75	5364	6584	9729
85	4245	8375	8880

Coefficients of Utilization % (Based on a floor reflectance of 0.2)											
Pc---	80				70			50			0
Pw---	70	50	30	10	70	50	30	50	30	10	0
RCR											
0	119	119	119	119	116	116	116	111	111	111	100
1	109	104	100	96	106	102	98	97	94	91	84
2	99	91	85	79	97	89	83	86	81	76	71
3	91	81	73	67	89	79	72	76	70	65	61
4	84	72	64	58	82	71	63	69	62	56	53
5	78	65	57	50	76	64	56	62	55	50	47
6	72	60	51	45	70	59	51	57	50	44	41
7	67	55	46	40	66	54	46	52	45	40	37
8	63	50	42	36	62	50	42	48	41	36	34
9	59	47	39	33	58	46	38	45	38	33	31
10	56	43	36	31	55	43	35	42	35	30	28

*Based on a floor reflectance of 0.2

FLP FluxSpace Linear

2', 3', 4' & 8'

Photometry

FLP430L840-Q-UNV-DIM

Luminaire Lumens	2999
Luminaire Efficacy Rating (LER)	150
Total Luminaire Watts	20.0
Spacing Criterion (0-180)	1.20
Spacing Criterion (90-270)	1.22

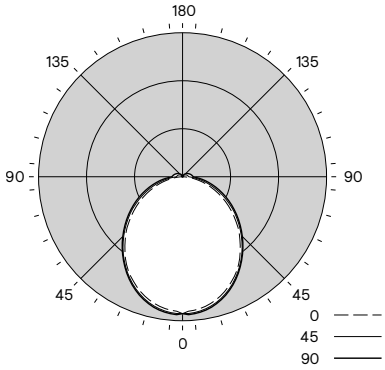

Candela Distribution						Flux
	0	22.5	45	67.5	90	Lumens
0	1046	1046	1046	1046	1046	
5	1024	1037	1042	1045	1050	99
15	976	989	995	998	1004	280
25	884	896	902	906	911	415
35	761	769	778	781	785	485
45	613	622	635	641	646	488
55	455	470	488	498	503	433
65	302	319	339	358	365	334
75	159	177	201	225	235	212
85	38	58	87	113	124	95
90	2	21	48	73	83	

Zonal Lumen Summary			
Zone	Lumens	%Fixture	%Lamp
0-30	793	26.5%	26.5%
0-40	1278	42.6%	42.6%
0-60	2199	73.3%	73.3%
0-90	2840	94.7%	94.7%
0-180	2999	100.0%	100.0%
90-180	155	5.2%	5.2%

Avg. Luminance (cd/m²)			
	0	45	90
45	7110	6684	6591
55	6479	6066	5996
65	5780	5340	5416
75	4875	4510	4830
85	3155	3545	4319

Coefficients of Utilization % (Based on a floor reflectance of 0.2)											
Pc---	80				70			50			0
Pw---	70	50	30	10	70	50	30	50	30	10	0
RCR											
0	118	118	118	118	114	114	114	108	108	108	95
1	107	102	98	94	104	99	95	94	91	88	78
2	97	89	82	76	94	86	80	82	77	72	65
3	89	78	70	63	86	76	68	72	66	61	55
4	81	69	60	54	78	67	59	64	57	52	47
5	75	62	53	46	72	60	52	58	50	45	41
6	69	56	47	40	67	55	46	52	45	39	36
7	64	51	42	36	62	50	41	47	40	35	32
8	60	46	38	32	58	45	37	44	36	31	28
9	56	42	34	29	54	42	34	40	33	28	25
10	52	39	31	26	51	38	31	37	30	26	23

*Based on a floor reflectance of 0.2

FLP430L840-R-UNV-DIM

Luminaire Lumens	3039
Luminaire Efficacy Rating (LER)	152
Total Luminaire Watts	20.0
Spacing Criterion (0-180)	1.18
Spacing Criterion (90-270)	1.30

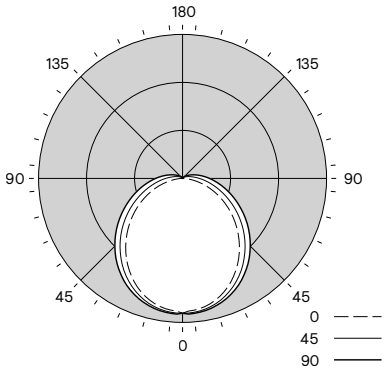

Candela Distribution						Flux
	0	22.5	45	67.5	90	Lumens
0	936	936	936	936	936	
5	919	929	933	937	941	89
15	876	889	899	908	913	253
25	793	809	829	848	857	381
35	679	698	731	758	771	456
45	547	569	612	650	665	470
55	407	434	485	530	548	431
65	269	299	358	410	429	351
75	140	176	244	300	321	252
85	33	80	153	207	227	157
90	3	49	118	169	187	

Zonal Lumen Summary			
Zone	Lumens	%Fixture	%Lamp
0-30	723	23.8%	23.8%
0-40	1179	38.8%	38.8%
0-60	2080	68.4%	68.4%
0-90	2840	93.4%	93.4%
0-180	3039	100.0%	100.0%
90-180	199	6.6%	6.6%

Avg. Luminance (cd/m²)			
	0	45	90
45	6234	5629	5732
55	5656	5024	5229
65	4962	4402	4743
75	4027	3836	4369
85	2318	3488	4192

Coefficients of Utilization % (Based on a floor reflectance of 0.2)											
Pc---	80				70			50			0
Pw---	70	50	30	10	70	50	30	50	30	10	0
RCR											
0	117	117	117	117	114	114	114	107	107	107	93
1	106	100	95	91	102	97	93	92	88	85	75
2	96	87	79	73	92	84	77	79	74	69	61
3	87	76	67	60	84	74	66	70	63	57	51
4	79	67	58	51	77	65	57	62	54	49	44
5	73	60	50	44	70	58	50	55	48	42	38
6	67	54	45	38	65	52	44	50	42	37	33
7	62	49	40	33	60	48	39	45	38	32	29
8	58	44	36	30	56	43	35	41	34	29	26
9	54	41	32	27	52	40	32	38	31	26	23
10	51	38	30	24	49	37	29	35	28	24	21

*Based on a floor reflectance of 0.2

FLP430L840-U-UNV-DIM

Luminaire Lumens	3065
Luminaire Efficacy Rating (LER)	153
Total Luminaire Watts	20
Spacing Criterion (0-180)	1.18
Spacing Criterion (90-270)	1.24

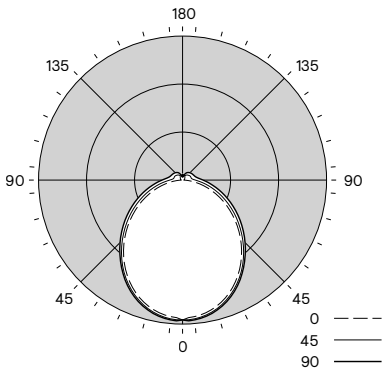

Candela Distribution						Flux
	0	22.5	45	67.5	90	Lumens
0	971	971	971	971	971	
5	952	963	967	971	974	92
15	908	919	925	929	933	260
25	823	833	841	848	853	387
35	705	714	726	735	739	453
45	568	578	592	607	614	457
55	424	434	456	479	488	409
65	284	296	327	357	368	324
75	152	171	212	248	261	222
85	42	70	121	161	176	128
90	9	41	89	129	143	

Zonal Lumen Summary			
Zone	Lumens	%Fixture	%Lamp
0-30	739	24.1%	24.1%
0-40	1192	38.9%	38.9%
0-60	2057	67.1%	67.1%
0-90	2731	89.1%	89.1%
0-180	3065	100.0%	100.0%
90-180	334	10.9%	10.9%

Avg. Luminance (cd/m²)			
	0	45	90
45	4454	3991	3970
55	4048	3543	3585
65	3607	3103	3237
75	3012	2691	2979
85	2021	2418	2990

Coefficients of Utilization % (Based on a floor reflectance of 0.2)											
Pc---	80				70			50			0
Pw---	70	50	30	10	70	50	30	50	30	10	0
RCR											
0	116	116	116	116	112	112	112	105	105	105	89
1	105	100	95	91	101	97	93	90	87	84	72
2	95	87	80	74	92	84	78	79	73	69	60
3	87	76	68	61	84	74	66	69	63	58	50
4	80	67	59	52	76	65	57	62	55	49	43
5	73	60	51	45	70	59	50	55	48	42	37
6	68	54	45	39	65	53	44	50	43	37	33
7	63	49	40	34	60	48	40	45	38	33	29
8	58	45	36	31	56	44	36	42	34	29	26
9	54	41	33	28	53	40	32	38	31	26	23
10	51	38	30	25	49	37	30	35	29	24	21

*Based on a floor reflectance of 0.2

FLP FluxSpace Linear

2', 3', 4' & 8'

Photometry

FLP430L840-W-UNV-DIM

Luminaire Lumens	3084
Luminaire Efficacy Rating (LER)	153
Total Luminaire Watts	20.1
Spacing Criterion (0-180)	1.24
Spacing Criterion (90-270)	1.60

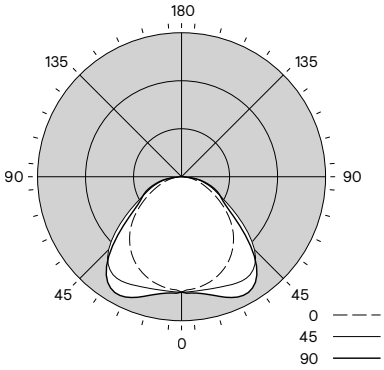

Candela Distribution						Flux
	0	22.5	45	67.5	90	Lumens
0	961	961	961	961	961	
5	942	956	960	965	973	92
15	908	931	966	1002	1023	274
25	842	888	992	1074	1106	453
35	740	834	997	1055	1074	590
45	599	744	860	829	812	601
55	420	559	569	502	483	469
65	254	336	337	340	347	328
75	135	181	202	214	222	207
85	40	69	72	57	54	70
90	4	4	3	3	2	

Zonal Lumen Summary			
Zone	Lumens	%Fixture	%Lamp
0-30	819	26.6%	26.6%
0-40	1410	45.7%	45.7%
0-60	2479	80.4%	80.4%
0-90	3084	100.0%	100.0%

Avg. Luminance (cd/m²)			
	0	45	90
45	7036	10113	9551
55	6090	8250	6993
65	5002	6635	6834
75	4323	6482	7131
85	3825	6868	5112

Coefficients of Utilization % (Based on a floor reflectance of 0.2)											
Pc---	80				70			50			0
Pw---	70	50	30	10	70	50	30	50	30	10	0
RCR											
0	119	119	119	119	116	116	116	111	111	111	100
1	109	104	100	96	106	102	98	97	94	91	84
2	99	91	84	78	96	89	83	85	80	75	70
3	90	80	72	65	88	78	71	75	69	63	59
4	83	71	62	55	80	69	61	67	60	54	50
5	76	63	54	48	74	62	54	60	52	47	44
6	70	57	48	41	68	56	47	54	46	41	38
7	65	51	43	37	63	51	42	49	42	36	34
8	60	47	38	32	59	46	38	45	37	32	30
9	56	43	35	29	55	42	34	41	34	29	27
10	53	40	32	26	52	39	31	38	31	26	24

*Based on a floor reflectance of 0.2

© 2026 Signify Holding. All rights reserved. The information provided herein is subject to change, without notice. Signify does not give any representation or warranty as to the accuracy or completeness of the information included herein and shall not be liable for any action in reliance thereon. The information presented in this document is not intended as any commercial offer and does not form part of any quotation or contract, unless otherwise agreed by Signify.

GENLYTE SOLUTIONS
a Signify business

Signify North America Corp.
400 Crossing Blvd, Suite 600
Bridgewater, NJ 08807
Telephone: 800-555-0050

Signify Canada Ltd.
281 Hillmount Road,
Markham, ON, Canada L6C 2S3
Telephone: 800-668-9008

All trademarks are owned by Signify Holding or their respective owners.

LIGHTOLIER

Downlighting

Calculite LED 4" gen 3

C4RA/C4SA Adjustable Downlight



Calculite LED 4" generation 3 features industry leading visual comfort and patented installation flexibility. MesoOptics soft focus optics provides excellent uniform illumination and color consistency at articulated angles. Ideal for use in open office, retail, hospitality, healthcare, and residential applications.

Project:

Location:

Cat.No:

Type: C.

Qty:

Notes:

Follow the ordering guidelines below. Each step is a separate order line.

Step 1	**Frame:** Ordered & shipped separately.
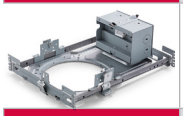	**Frame** **Example:** 4ARN 4AR 4AR
Step 2	**Engine & Trim:** Ordered & shipped as a single product.
	**Engine** **Example:** C4RA20930NSZ10U-C4RACC C4 — C4
Step 3 (optional)	**Accessories:** Ordered & shipped separately.

Frame

example: 4ARN

Series	Installation	Voltage / Options
	N	—
4AR 4" Round for C4R Engine **4AS** 4" Square for C4S Engine	**N** Non-IC	**—** Universal (120V-347V) **EM6** Emergency, 6W Self-Test/Self-Diagnostic [2] **LC** Chicago Plenum
	A AirSeal (IC) [1]	**—** Standard Universal (120V-347V)

Engine

example: C4RA20930NSZ10ULS6010

Series	Lumens	CRI/CCT	Beam	Dimming	Options	Voltage	Options	Plenum
	30	935		Z10	D20			
C4RA 4" Round Adjustable Accent **C4SA** 4" Square Adjustable Accent	**05** 500lm **10** 1000lm **15** 1500lm **20** 2000lm **25** 2500lm [1] **30** 3000lm [1] **35** 3500lm [1] **40** 4000lm [1]	**927** 90CRI/2700K **930** 90CRI/3000K **935** 90CRI/3500K **940** 90CRI/4000K **9D2W** 90CRI/3000-1800K [3] **96T** 90CRI/2700-6500K tunable white [4]	**NS** Narrow Spot (13°) [5] **NF** Narrow Flood (23°) **FL** Flood (33°) **WF** Wide Flood (52°)	**Z10** 0-10V 1%	—— None **D2O** Dim to Off	**U** 120/277V **3** 347V (Z10 only)	—— Symmetrical soft focus **LS6010** Linear spread 60x10 **ASY8** Asymmetric 8° bend angle **ASY21** Asymmetric 21° bend angle	—— Standard **R** Remodeler [6]
				L01 Lutron PEQ0 0.1% (up to 2000lm) **L1** Lutron LDE1 1% (500lm not available) **LD** Lutron L3D 1% (500lm not available)	—— None	**U** 120/277V For 347V order T347-75VA accessory		
				DALI DALI 0.1%	—— None **LIN** Linear			
				SOL EldoLED Solo 0-10V 0.1% **DMX** Digital Multiplexing w/RDM 0.1%	—— None **LIN** Linear **SQR** Square			
				RA Interact Pro [7]				
				E Forward & Reverse Phase (up to 2000lm)		**1** 120V		

Declare. c UL us LISTED WET LOCATION RoHS COMPLIANT mesoOptics interact ready.

C4RA/C4SA Calculite LED 4" gen 3

Round & Square Adjustable Accent

Trim

example: C4RACLF

Series	Finish	Flange	Options
	CD	—	
C4RA 4" Round Adjustable Accent	**CL** Specular clear **CC** Comfort clear **CD** Comfort clear diffuse **CZ** Champagne bronze (C4RA only)	**–** White (matte) **B** Black (matte) **P** Polished (matches aperture) – C4RA round trim only **A** Aluminum (painted) – C4SA square trim only **F** Flangeless (requires mud-in ring)	**WL** Wet location
C4SA 4" Square Adjustable Accent	**WT** Textured White (painted) **BZ** Textured bronze (painted) **D** Aluminum diffuse (painted)	**–** White (matte) **B** Black (matte) **P** Polished (matches aperture) **F** Flangeless (requires mud-in ring)	
	BK Black (C4RA is anodized, C4SA is matte) **BT** Textured Black (painted)	**–** White (matte) **P** Polished (matches aperture) **F** Flangeless (requires mud-in ring)	
	WH White (matte) **WHAMF** White (gloss antimicrobial)	**–** White (matches finish) **F** Flangeless (requires mud-in ring)	

Accessories

CA4RFMR	Mud-in ring for use in 4" Round flangeless trim installations (ordered with a flangeless trim)
CA4SFMR	Mud-in ring for use in 4" Square flangeless trim installations (ordered with a flangeless trim)
CAEM6	Field-installable Bodine BSL6 6W battery pack with self-test/self-diagnostic (for new construction frames, 120-277V) (see page 3 for details)
CAEM6TSCP	Emergency test switch mounting plate. Must be ordered with EM6 frame for remote test switch (see page 6 for details)
SWCS	Interact Ready System Bridge accessory w/integral occupancy & daylight sensor (compatible with all 0-10v options, see SWCS spec sheet) - Requires IRT9015 IR remote & Interact Pro App for commissioning.
T347-75VA	347:120V step-down transformer for non-IC (N) frame only (see page 3 for details)

Optical Accessories (field-installable)

CA4NSRPO	Narrow Spot upper reflector
CA4NFRPO	Narrow Flood upper reflector
CA4FLRPO	Flood upper reflector
CA4WFRPO	Wide flood upper reflector
CL4HCL	Hex cell louver
CA4RSYM	4" symmetrical MesoOptics
CA4RLS6010	4" 60x10 linear MesoOptics
CA4RASY8	4" asymmetrical 8° MesoOptics
CA4RASY21	4" asymmetrical 21° MesoOptics

Footnotes for page 1

1. IC rated up to 2000lm with AirSeal (A) frame, above 2000lm non-IC (L01 dimming option IC to 1500lm only).
2. Emergency (EM6) frame requires remote mounted test switch (not compatible with 347V). Order CAEM6TSCP mounting plate accessory. Not available with Chicago plenum (LC) option.
3. Dim-to-warm (D2W) available only with 0-10V (Z10) and DALI (D) dimming options (available up to 2000lm).
4. Tunable white available with 0-10v, DMX, DALI, and Lutron T, and RA dimming options (available up to 2000lm).
5. Narrow spot beam available up to 2000lm.
6. For remodeler installations, order light engine and trim only, no frame needed (not available with RA dimming).
7. Linear driver profile, enables wireless connected lighting control (see page 7 for details). Specify only with Non-IC (N) frame, not for use with LC, EM6, nor 9D2W options.

C4RA/C4SA Calculite LED 4" gen 3

Round & Square Adjustable Accent

Frame-in-kits

New Construction:
Galvanized stamped steel for dry or plaster ceilings. Pre-installed telescoping mounting bars from 13" to 24". For 4' distances, use 1/2" EMT, 1-1/2" x 1/2" U or C channel.

AirSeal (air-tight/IC):
Galvanized steel housing for dry or plaster ceilings. Pre-installed telescoping mounting bars from 13" to 24". Tested in compliance with ASTM E283 for airtight.

Max ceiling thickness is 0.75" (19 mm)
Min ceiling thickness is 0.5" (12 mm)

Patented install Mounting frame:

- Pre-installed mounting bars for fast and tool-less installs into T-grid & hat channel ceilings.
- Close-cut aperture design eliminates possibility of gap between ceiling opening and reflector flange.
- Separate wiring compartment for wiring frame to building allows inspection prior to light engine install.
- Simple plug-and-play connection between frame and light engine from below ceiling.

Dimming

All configurations are FCC Class A unless otherwise specified.

- Advance 0-10V 1% (Z10), logarithmic curve is standard, specify D2O for factory-set dim-to-off function, consult factory for linear dimming curve.
- EldoLED SOLODrive (SOL) 0-10v 0.1%
- Lutron PEQ0 (L) Hi-Lume Premier 0.1% EcoSystem
- Lutron LDE1 (LH) EcoSystem 1%
- Lutron L3DA (LD) Hi-Lume A 3-wire 1%
- Electronic low voltage (E) - forward or reverse phase dimming
- DALI (D) - DT6 DALI 0.1%
- DMX (DMX) - Digital Multiplexing with RDM 0.1%

Dimming Options

The following are factory-set options for the SOL, D, and DMX driver options (ex. DMXLIN):

SOL/D/DMX Logarithmic (-) standard
SOL/D/DMX Linear (LIN)
SOL/DMX Square (SQR)

Optical systems

Quality of light:
2 SDCM ensures color consistency from fixture to fixture and over the luminaire's long lifetime.

C4RA round trim construction:
Precision spun high grade aluminum reflectors with options for anodized or painted finishes.

C4SA square trim construction:
Precision die-cast aluminum reflectors with options for anodized or painted finishes.

Color rendering:
Consistent CRI of greater than 90 across the spectrum.

Dim to warm (D2W) and tunable white (6T):
Delivered CCT gradually warms from 3000-1800K along dimming range. 0-10V dimming only. Fixture-to-fixture consistency of ≤3SDCM at 2700K & 3000K, and ≤ 5SDCM at 1800K.

Diffusion Media

- MesoOptics PET film containing surface relieved, microscopic light diffusing structures/elements
- Optimizes luminaire efficacy via high optical transmission.
- Homogenizes light engine luminance providing smooth gradients of light and mitigates pixilation.
- Other distribution options available including linear spread and asymmetric.
- Hex cell louver may be ordered factory or field installed. Works with media holder supplied with original light engine.
- All media factory or field assembled to primary optic via integral holder.

Light engine

Quick connect power pack allows for easy installation and replacement from below ceiling with no need for additional wiring. This allows for:

- Frame and ceiling installation to be performed while still finalizing details such as lumen packages, CCT and control type.
- Easy replacement of electronics at end of life with minimal wasted material and labor required.
- Ease and upgradability of technology.

347V light engines are Z10 dimming only and include dedicated 347V driver. For 347V non-Z10 dimming, order T347-75VA field-installed step-down transformer accessory.

Predicted 90% lumen maintenance
to 60,000 hours at 30C ambient.

Remodeler Engine (R)

- No frame is required.
- Remodeler engine is suited for new construction, remodel, and retrofit applications.
- All wiring is done on the integral j-box to the engine.
- LCEM6 6W battery pack accessory is available for field installation.

Emergency

- Bodine BSL6 6W battery pack with self-test/diagnostic functionality installed.
- Indicator light/test switch mounted remote.
- CAEM6TSCP accessory ceiling plate to remote mount test switch. Required with EM6 frame.

Adjustability

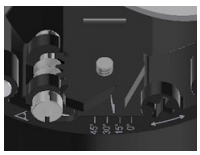

- 45° vertical tilt, mechanical aiming with lock and indicator
- 362° rotation with lock
- Field changeable optics

Options and Accessories

Field Installed Emergency: Refer to Calculite-LyteProfile-EasyLyte Emergency Battery Pack specification sheet for more details.

C4RA round flangeless mud-in ring:
CA4RFMR – round mud-in ring for plaster installs.

C4SA square flangeless mud-in ring:
CA4SFMR – square mud-in ring for plaster installs.

CAEM6TSCP: Ceiling cover plate for remote mounted EM6 test switch. 1/2" (25mm) hole, 4 3/8" (109mm) x 2 3/4" (69mm) rectangular. Includes two mounting screws.

CAEM6: Field install EM6 kit with Bodine BSL6 6W battery pack with self-test/self-diagnostic, mounts to new construction frames. Includes remote ceiling plate for test switch.

SWCS: Interact Ready System Bridge Accessory Requires IRT9015 IR remote and Interact Pro App for commissioning.

T347-75VA: Field installable 347:120V 75VA step-down transformer, attaches to knock out on frame junction box, for use with non-IC (N) frame only. Not available with EM6 frame option.

Labels and Listings

- cULus listed for damp locations (wet loc. available)
- RoHS certified
- CCEA (frames with *LC suffix)
- Red List Declare label certified, ID SIG-0021 (View full Declare label)

Warranty

5 year limited warranty

Visit Signify.com/warranties for more information on Signify's standard 5-year limited warranty on complete luminaire systems.

C4RA/C4SA Calculite LED 4" gen 3

Round & Square Adjustable Accent

Polished Reflectors



Specular clear (CL): Most specular and most efficient finish, delivers maximum photometric performance but can produce a mirror image effect of the interior space.



Champagne bronze (CZ): Semi-specular finish that softens light at the source of the reflector while providing a warmer reflector appearance (slightly warmer).



Comfort clear (CC): Semi-specular finish that softens the light at the source of the reflector and creates a subtle, even luminance from the reflector cone.



White (WH): (matte) Brightest illuminated aperture and provides the smoothest transition to most ceilings when off (white is only available with a white flange).



Comfort clear diffuse (CD): Slightly diffuse clear finish, that eliminates iridescence and reduces the mirror image effect inherent with specular finishes.



Black (BK): (anodized) Specular finish that provides the lowest aperture brightness possible and significantly reduces source identification in a ceiling.

Textured Reflectors

Shown as square reflectors but represent the finish of Calculite round reflectors.

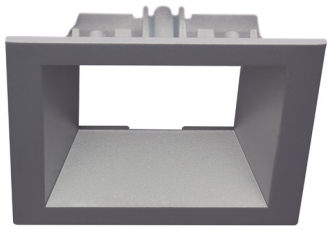

Aluminum diffuse (D): Matte painted finish.



Textured white (WT): Matte painted finish.



Bronze (BZ): Matte painted finish.



Textured black (BT): Matte painted finish.

Flanges



White (–): (matte) Provides the smoothest transition to ceilings when off.



Polished (P): (matches aperture) Produces a continuous look throughout the reflector (aperture matching). Not available for square trims with CL, CD, CC, and CZ finishes.



Flangeless (F): (flush-mount)Creates a flush, virtually seamless transition from aperture to ceiling.

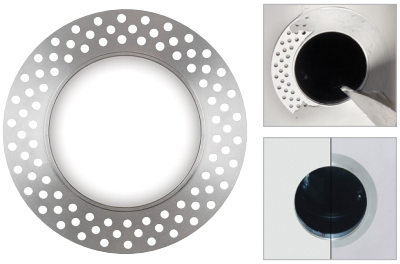

Mud-in ring (FMR): Low profile, non-metallic mud-in ring provides a raised rib to plaster up to and a 3⁄16" flange thickness. The ring is attached to the ceiling material as opposed to the frame-in kit to avoid conduction of heat and vibration which can cause yellowing or cracking of the plaster.

C4RA Calculite LED 4" gen 3

Round Adjustable Accent

New Construction (N) for C4RA

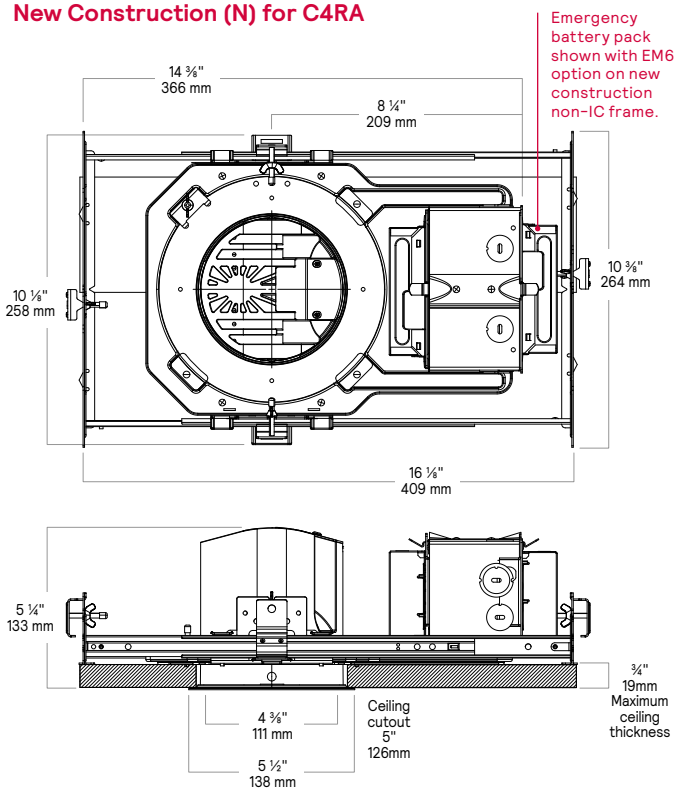

AirSeal (ASIC) & Chicago Plenum (LC) for C4RA

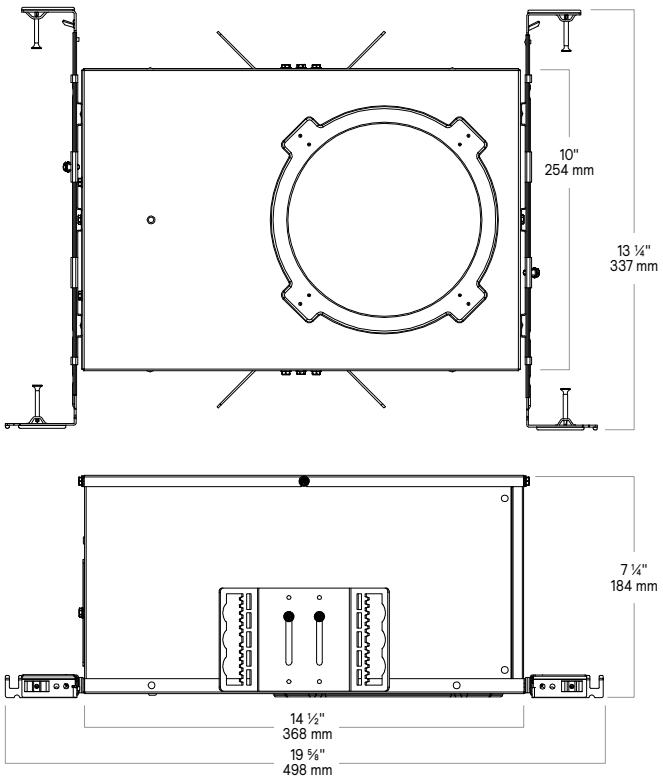

Remodeler (R) for C4RA

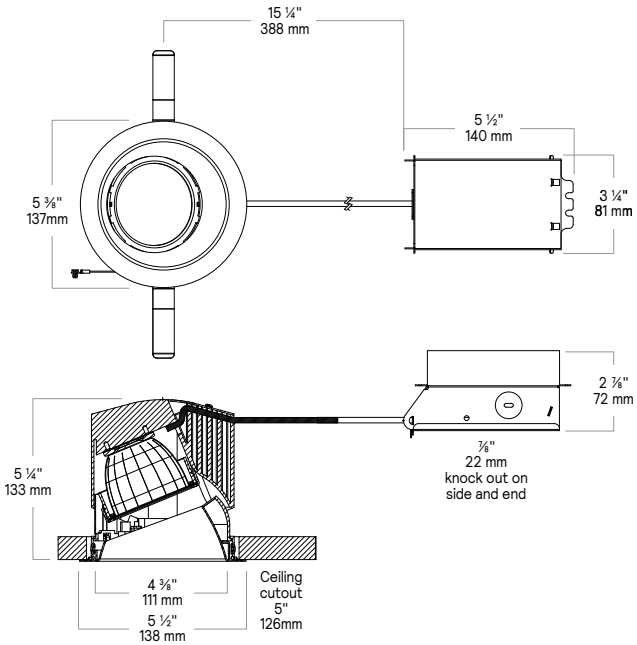

Flangeless mud-in ring (CA4RFMR) accessory for C4RA

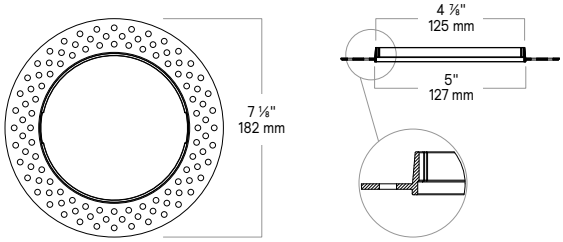

C4SA Calculite LED 4" gen 3

Square Adjustable Accent

New Construction (N) for C4SA

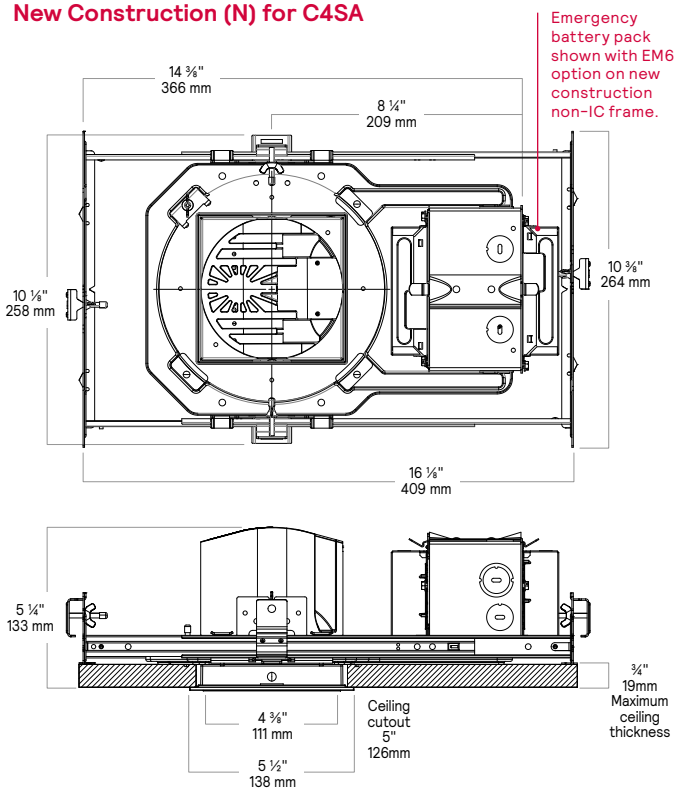

AirSeal (ASIC) & Chicago Plenum (LC) for C4SA

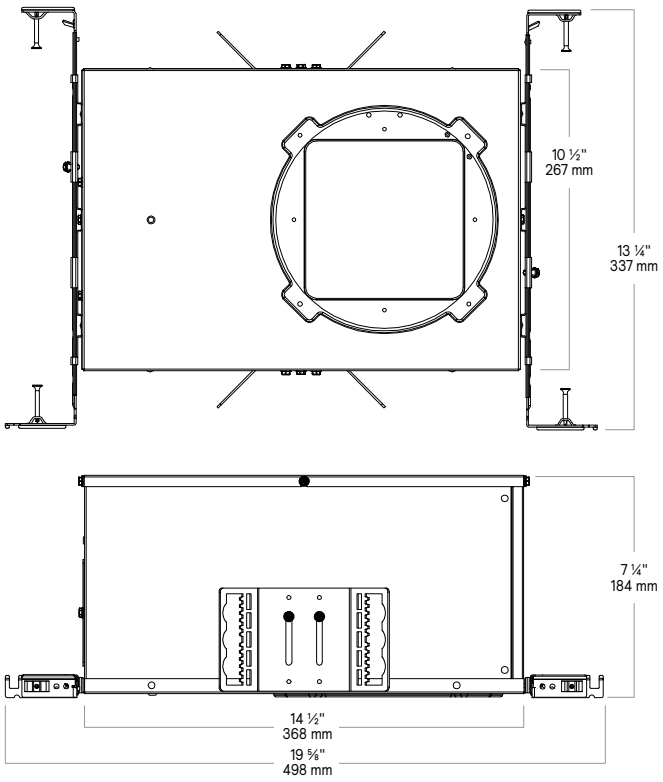

Remodeler (R) for C4SA

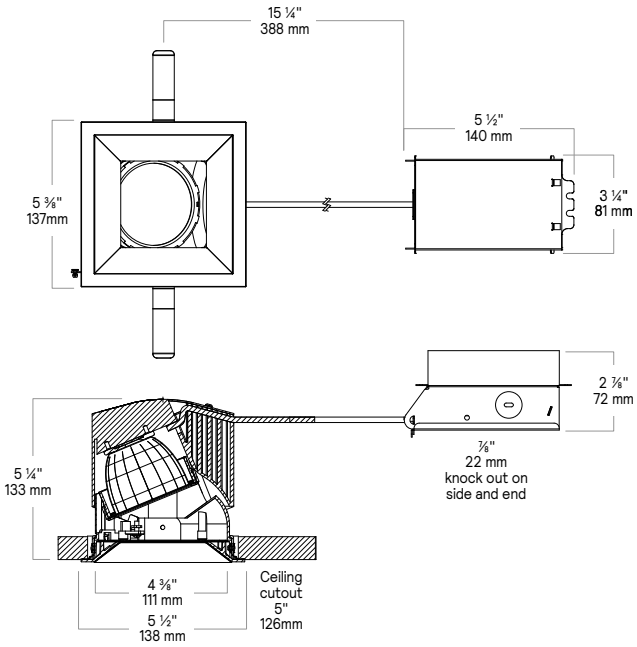

Flangeless mud-in ring (CA4SFMR) accessory for C4SA

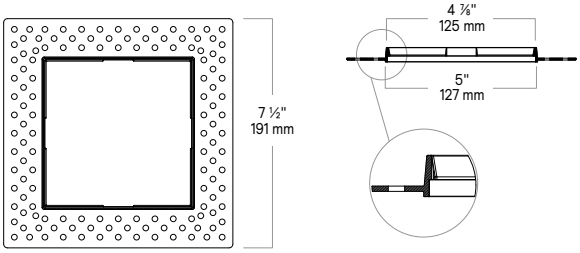

C4RA/C4SA Calculite LED 4" gen 3

Round & Square Adjustable Accent

Linear driver

Requires 19" plenum space.

Required for DALI (D) 3500lm and above, and all Interact (RA) dimming options.

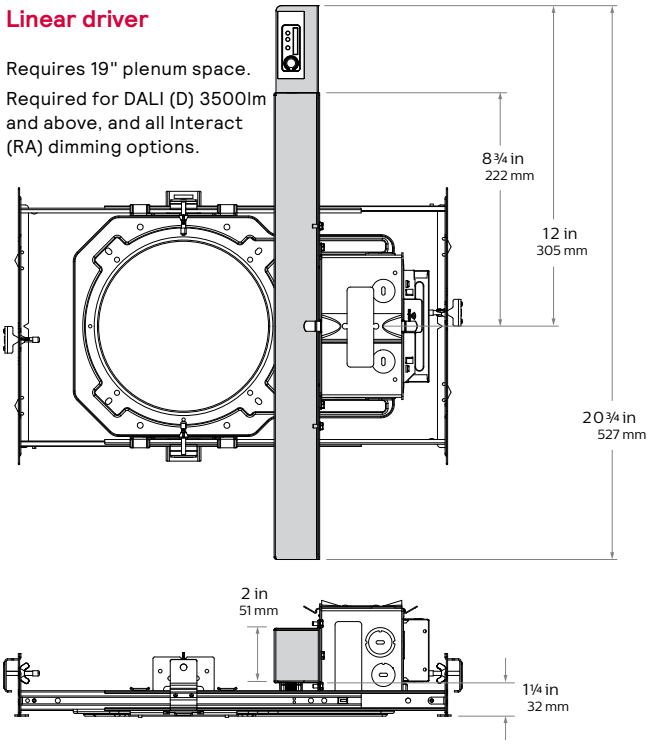

C4RA/C4SA Calculite LED 4" gen 3

Round & Square Adjustable Accent



AccuRender Technology (CRI 90+)

The right light brings colors to life. Our new AccuRender technology helps ensure colors are rendered more accurately and consistently, while doing so as efficiently as CRI 80 products.



Standard CRI 80

Good color rendering and high efficacy



Standard CRI 90

Better color rendering and low efficacy



AccuRender

Best color rendering, color preference and high efficacy

Enjoy design flexibility

Full range of products and options:

- Available soon in across Lightolier portfolio for application flexibility
- Multiple color temperatures (CCTs) and lumen packages offered

Promote savings

High efficacy, with no penalty:

- Energy efficacy compares well to conventional 80 CRI
- Up to 25% more energy savings vs competitor 90 CRI[1]
- Helps meet Title 24 requirements

Show your true colors

High color rendering:

- True to life colors that help energize your environment and render better flesh tones critical for healthcare hospitality and retail applications.
- R_a up to 94 CRI
  R_9 up to 67 CRI
  G_a up to 99 CRI
  C_9 up to 94 CRI
- R_f up to 92 TM-30
  $R_{f,h1}$ up to 91 TM-30
  R_9 up to 100 TM-30
  $R_{cs,h1}$ up to -5% TM-30

Achieve color balance

Best in class color consistency:

- Promote aesthetic harmony in your space with ≤ 2 SDCM

C4RA/C4SA Calculite LED 4" gen 3

Round & Square Adjustable Accent

interact

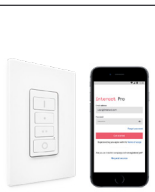





	Standalone	Gateway	Gateway + IoT
Dimming, grouping, and zoning	✓	✓	✓
Bluetooth and ZigBee enabled	✓	✓	✓
Motion sensing and daylight harvesting	✓	✓	✓
Integration with 0–10V and phase dimming fixtures	✓	✓	✓
Code compliance	✓	✓	✓
Granular dimming and dwell time	✓	✓	✓
Correlated color temperature (CCT) tuning by switch **New**	✓	✓	✓
Support for sensor-based Tunable White luminaires **New**	✓	✓	✓
Energy reporting and monitoring		✓	✓
Scheduling		✓	✓
Demand response		✓	✓
BMS integration (BACnet)			✓
Floor plan visualization			✓
IoT sensors for wellness			✓
IoT Apps for productivity			✓

Currently supported maximum system size

To be able to design the lighting system correctly for the customer, it is important to know the prime characteristics of the system, its possibilities and limitations.

System level	
Total number of gateways	Unlimited
Total number of devices	200 per network
• Luminaires with integrated sensors	150
• Smart TLEDS	150
• Zones + groups	64
Total number of ZGP devices (sensors and switches)	50
• Sensors	30
• Switches	50

Group level	
Recommended number of lights	40 (maximum 150)
Number of ZGP devices	5
Number of scenes	16

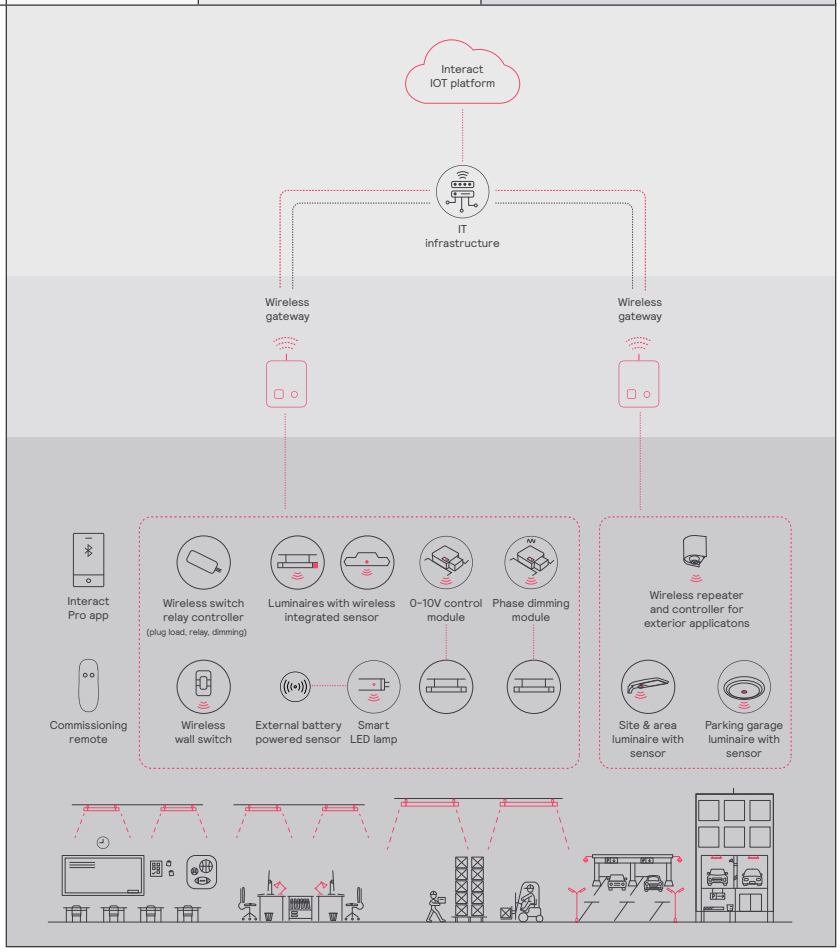

C4RA/C4SA Calculite LED 4" gen 3

Round & Square Adjustable Accent

Wireless controls options

Interact

- SWZCS is a connected sensor with integral occupancy and daylight sensing and supports wireless mesh connectivity.
- The sensor works in the standalone mode (similar to SpaceWise) when configured without a gateway or in a cloud connected mode if a compatible gateway is used.
- Interact includes an App, a portal and a broad portfolio of wireless luminaires, lamps and retrofit kits all working on the same system.
- Startup is implemented via Interact Pro App (Android or iPhone) & BlueTooth connectivity. The App provides flexibility to choose between a gateway or non gateway mode for setup.
- Setup with the gateway requires wired internet access to the gateway. It is possible to add a gateway at a later point.
- Prepare project configuration steps remotely and use IRT9015 remote on-site to identify and group devices together.

  Compatible with:

  - SWS200 & UID8465 wireless scene switch
  - Battery powered IP42 presence sensor OCC sensor IA CM WH 10/1
  - Battery powered IP42 presence & daylight sensor OCC-DL sensor IA CM IP42 WH
  - LCN3110: battery powered IP65 presence sensor, OCC sensor IA CM IP65W
  - LCN3120: battery powered IP65 presence & daylight sensor, OCC-DL sensor IA CM IP65 WH
- For more information on Interact visit: interact-lighting.com/interactproscalablesystem

Radio only sensor (RA or RADIO)

- Integral RA or RADIO only sensor simply enables wireless mesh connectivity to the luminaire without any occupancy or daylight sensing.
- Ideal for applications where sensing functionality is managed by other Interact devices and the luminaire only needs to have wireless connectivity.
- Interact includes an App, a portal and a broad portfolio of wireless luminaires, lamps and retrofit kits all working on the same system.
- Startup is implemented via Interact Pro App (Android or iPhone) & Bluetooth connectivity. The App provides flexibility to choose between a gateway or non-gateway mode for setup.
- Setup with the gateway requires wired internet access to the gateway. It is possible to add a gateway at a later point.
- Prepare project configuration steps remotely, identify and group devices together onsite.
- Compatible with SWS200 and UID8465 wireless scene switch, wireless Occ sensor (OCC SENSOR IA CM IP42 WH 10/1) and wireless Day/Occ sensor (OCC MULTI SENSOR IA CM WH 10/1).
- For more information on Interact visit: interact-lighting.com/interactproscalablesystem

Sensor bundle (IAOSB or SB)

- A wireless IoT connected lighting solution for large enterprises that span across multiple floors, buildings and require multiple gateways.
- View all your projects under one dashboard and easily compare insights from multiple projects in one view.
- Compatible with SWS200 wireless scene switch, wireless Occ sensor (OCC SENSORIA CM IP42 WH 10/1) and wireless Day/Occ sensor (OCC MULTI SENSOR IA CM WH 10/1) and wireless Occupancy or Daylight & Occupancy sensors available.• Use Interact software and insights to increase building efficiency, achieve building wide integration and optimize space through occupancy analytics.
- IAOSB or SB option in addition to occupancy and daylights sensing supports advanced IoT capabilities, such as people estimation analysis, desk level temperature & humidity sensing, noise classification, and BLE beacon.
- Requires compatible Gateway and internet connectivity for commissioning.
- For more information, visit: interact-lighting.com/interactproscalablesystem

Emergency Options (ER100)

- **Power Sensing** (factory default) – Recommended UL924 option requires unswitched power sense line, absence of voltage on the normal circuit triggers luminaire to 100% output.
- **Power Interruption Detection** (field option) – Detects AC power interruption >30ms triggers 90 minute emergency mode with luminaire at 100% output.

Wired controls options

Interact (PoE):

- PoE based IoT connected lighting solution for large enterprises that span across multiple floors, buildings and require multiple gateways.
- Use Interact software and insights to increase building efficiency, achieve building wide integration and optimize space through occupancy analytics.
- Test switch and indicator light mounted on side of chassis on one end.
- Supports advanced IoT Apps on Personal Control, Space Management, wayfinding, room/desk reservation and offers open APIs for light control and data exchange.
- Integral sensor option for occupancy sensing (PIR) and/or daylight harvesting available for additional energy savings.
- Optional integral emergency controller and battery pack provides 600lm nominal output.
- PoE lighting controller is accessible from below.
- Emergency battery has a 3 month pre-installed shelf life, and must be stored and installed in environments of 20C to 30C (-4F to 86F) ambient, and 45-85% relative humidity.
- For more information on Interact Office Wired, visit: interact-lighting.com/office or www.usa.lighting.philips.com/systems/system-areas/offices.

Interact supported sensor option codes across Genlyte product lines

	Evokit	Day-Brite	Ledalite	Lightolier
ZigBee + Bluetooth + Sensing	SWZCS	SWZCS	CS	SBA accessory (external)
ZigBee + Bluetooth	RADIO	RADIO	RA	RA
ZigBee + Bluetooth + Sensing + Environmental data	IAOSB	IAOSB	SB	SB
ZigBee + Highbay + Sensing	-	SWZCSH	-	-

C4RA/C4SA Calculite LED 4" gen 3

Round & Square Adjustable Accent

Narrow Spot

Light engine		Input volts	Input freq	Input current	LED Drive current	Input power	LED Power	THD power @ Max Load	Power factor @ Max Load
C4_A05_ NSZ10U/3	2	120V	50/60Hz	0.053A	0.15A	6.3W	5.0W	<10%	>0.9
	2	277V	50/60Hz	0.024A	0.15A	6.5W	5.0W	<30%	>0.9
	2	347V	50/60Hz	0.021A	0.15A	7.3W	5.0W	N/A	>0.9
C4_A10_ NSZ10U/3	7	120V	50/60Hz	0.087A	0.25A	10.4W	8.6W	<10%	>0.9
	7	277V	50/60Hz	0.038A	0.25A	10.6W	8.6W	<10%	>0.9
	7	347V	50/60Hz	0.035A	0.25A	12.1W	8.6W	<30%	>0.9
C4_A15_ NSZ10U/3	12	120V	50/60Hz	0.126A	0.36A	15.1W	12.7W	<10%	>0.9
	12	277V	50/60Hz	0.055A	0.36A	15.2W	12.7W	<10%	>0.9
	12	347V	50/60Hz	0.050A	0.36A	17.3W	12.7W	<25%	>0.9
C4_A20_ NSZ10U/3	17	120V	50/60Hz	0.191A	0.55A	22.9W	19.4W	<10%	>0.9
	17	277V	50/60Hz	0.083A	0.55A	23.0W	19.4W	<10%	>0.9
	17	347V	50/60Hz	0.070A	0.55A	24.3W	19.4W	<20%	>0.9
C4_A25_ NSZ10U/3	24	120V	50/60Hz	0.198A	0.60A	23.8W	20.2W	<10%	>0.9
	24	277V	50/60Hz	0.086A	0.60A	23.8W	20.2W	<10%	>0.9
	24	347V	50/60Hz	0.072A	0.60A	25.1W	20.2W	<20%	>0.9
C4_A30_ NSZ10U/3	29	120V	50/60Hz	0.239A	0.72A	28.7W	24.5W	<10%	>0.9
	29	277V	50/60Hz	0.103A	0.72A	28.5W	24.5W	<10%	>0.9
	29	347V	50/60Hz	0.086A	0.72A	29.9W	24.5W	<15%	>0.9
C4_A35_ NSZ10U/3	35	120V	50/60Hz	0.288A	0.86A	34.5W	29.7W	<10%	>0.9
	35	277V	50/60Hz	0.124A	0.86A	34.3W	29.7W	<10%	>0.9
	35	347V	50/60Hz	0.101A	0.86A	34.9W	29.7W	<10%	>0.9
C4_A40_ NSZ10U/3	41	120V	50/60Hz	0.324A	0.96A	38.9W	33.5W	<10%	>0.9
	41	277V	50/60Hz	0.140A	0.96A	38.7W	33.5W	<10%	>0.9
	41	347V	50/60Hz	0.113A	0.96A	39.4W	33.5W	<10%	>0.9

Narrow Flood, Flood, Wide Flood

Light engine		Input volts	Input freq	Input current	LED Drive current	Input power	LED Power	THD power @ Max Load	Power factor @ Max Load
C4_A05_ [NF|FL|WF] Z10U/3	4	120V	50/60Hz	0.050A	0.15A	6.0W	4.8W	<10%	>0.9
	4	277V	50/60Hz	0.023A	0.15A	6.3W	4.8W	<30%	>0.9
	4	347V	50/60Hz	0.020A	0.15A	7.0W	4.8W	N/A	>0.9
C4_A10_ [NF|FL|WF] Z10U/3	9	120V	50/60Hz	0.072A	0.22A	8.7W	7.1W	<10%	>0.9
	9	277V	50/60Hz	0.032A	0.22A	8.9W	7.1W	<20%	>0.9
	9	347V	50/60Hz	0.029A	0.22A	10.1W	7.1W	<30%	>0.9
C4_A15_ [NF|FL|WF] Z10U/3	14	120V	50/60Hz	0.114A	0.35A	13.7W	11.5W	<10%	>0.9
	14	277V	50/60Hz	0.050A	0.35A	13.8W	11.5W	<10%	>0.9
	14	347V	50/60Hz	0.045A	0.35A	15.7W	11.5W	<25%	>0.9
C4_A20_ [NF|FL|WF] Z10U/3	19	120V	50/60Hz	#N/A	0.45A	#N/A	14.9W	#N/A	>0.9
	19	277V	50/60Hz	#N/A	0.45A	#N/A	14.9W	#N/A	>0.9
	19	347V	50/60Hz	#N/A	0.45A	#N/A	14.9W	#N/A	>0.9
C4_A25_ [NF|FL|WF] Z10U/3	24	120V	50/60Hz	0.198A	0.60A	23.8W	20.2W	<10%	>0.9
	24	277V	50/60Hz	0.086A	0.60A	23.8W	20.2W	<10%	>0.9
	24	347V	50/60Hz	0.072A	0.60A	25.1W	20.2W	<20%	>0.9
C4_A30_ [NF|FL|WF] Z10U/3	29	120V	50/60Hz	0.239A	0.72A	28.7W	24.5W	<10%	>0.9
	29	277V	50/60Hz	0.103A	0.72A	28.5W	24.5W	<10%	>0.9
	29	347V	50/60Hz	0.086A	0.72A	29.9W	24.5W	<15%	>0.9
C4_A35_ [NF|FL|WF] Z10U/3	34	120V	50/60Hz	0.288A	0.86A	34.5W	29.7W	<10%	>0.9
	34	277V	50/60Hz	0.124A	0.86A	34.3W	29.7W	<10%	>0.9
	34	347V	50/60Hz	0.101A	0.86A	34.9W	29.7W	<10%	>0.9
C4_A40_ [NF|FL|WF] Z10U/3	39	120V	50/60Hz	0.324A	0.96A	38.9W	33.5W	<10%	>0.9
	39	277V	50/60Hz	0.140A	0.96A	38.7W	33.5W	<10%	>0.9
	39	347V	50/60Hz	0.113A	0.96A	39.4W	33.5W	<10%	>0.9

C4RA/C4SA Calculite LED 4" gen 3

Round & Square Adjustable Accent

Aiming angles

L and **W** are the outer points where the candle power drops to 50% of the maximum. **FC** are the initial footcandles at the center of the beam. Data shown is for 3000K, use the table on the right for CRI/CCT adjustment factors.

FC	Footcandles
L	Beam length
W	Beam Width
D	Distance
A	Aiming Angle
C	Distance to center beam
CBCP	Center Beam Candlepower

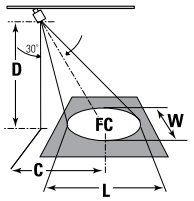

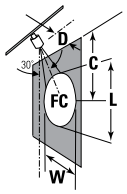

Adjustment Factors

Standard	Shallow 1" Regress	CCT (90CRI)	Lumens
CL = 105%	WT = 112%	4000K = 104%	1500lm = 130%
CC = 100%	D = 100%	3500K = 100%	1000lm = 100%
CD = 80%	BZ = 77%	3000K = 96%	750lm = 70%
WH = 80%	BT = 74%	2700K = 90%	500lm = 50%
CZ = 78%			
BK = 40%			

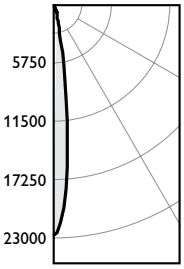

Frame: **4ARN**
Engine: **C4RA20935NSZ10U**
Trim: **C4RACL**

Output lumens:	2192 lms
Input watts:	19.4 W
CRI:	90 min
CCT[1]:	3500 K
CBCP:	22,737 cd
Beam Angle:	14°

Efficacy: **113.0 lm/w**
Report[2]: STMR-2778

Narrow Spot, 2000lm engine, 113lm/W at 19W

30° Horizontal Aiming

Distance			Beam	
D	C	F.C.	L	W
10	5.8	148	3.3	2.8
12	6.9	103	3.9	3.4
14	8.1	75	4.6	4.0
18	10.4	46	5.9	5.1

30° Vertical Aiming

Distance			Beam	
D	C	F.C.	L	W
3	5.2	316	3.1	1.5
4	6.9	178	4.1	2.0
5	8.7	114	5.1	2.5
6	10.4	79	6.2	2.9

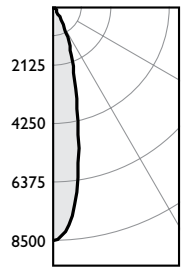

Frame: **4ARN**
Engine: **C4RA20935NFZ10U**
Trim: **C4RACL**

Output lumens:	2078 lms
Input watts:	17.3 W
CRI:	90 min
CCT[1]:	3500 K
CBCP:	8,480 cd
Beam Angle:	24°

Efficacy: **120.1 lm/w**
Report[2]: STMR-3283

Narrow Flood, 2000lm engine, 120lm/W at 17W

30° Horizontal Aiming

Distance			Beam	
D	C	F.C.	L	W
6	3.5	153	3.5	2.9
8	4.6	86	4.6	3.9
10	5.8	55	5.8	4.9
12	6.9	38	6.9	5.9

30° Vertical Aiming

Distance			Beam	
D	C	F.C.	L	W
2	3.5	265	3.9	1.7
3	5.2	118	5.9	2.6
4	6.9	66	7.9	3.4
5	8.7	42	9.8	4.3

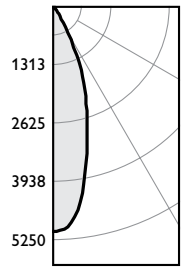

Frame: **4ARN**
Engine: **C4RA20935FLZ10U**
Trim: **C4RACL**

Output lumens:	2049 lms
Input watts:	17.9 W
CRI:	90 min
CCT[1]:	3500 K
CBCP:	5,060 cd
Beam Angle:	35°

Efficacy: **114.5 lm/w**
Report[2]: STMR-2981

Flood, 2000lm engine, 59 lm/W at 16W

30° Horizontal Aiming

Distance			Beam	
D	C	F.C.	L	W
6	3.5	91	5.2	4.4
8	4.6	51	7.0	5.8
10	5.8	33	8.7	7.3
12	6.9	23	10.4	8.7

30° Vertical Aiming

Distance			Beam	
D	C	F.C.	L	W
2	3.5	158	7.2	2.5
3	5.2	70	10.8	3.8
4	6.9	40	14.4	5.0
5	8.7	25	18.0	6.3

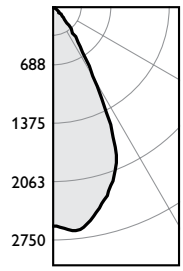

Frame: **4ARN**
Engine: **C4RA20935WFZ10U**
Trim: **C4RACL**

Output lumens:	2080 lms
Input watts:	17.4 W
CRI:	90 min
CCT[1]:	3500 K
CBCP:	2,578 cd
Beam Angle:	54°

Efficacy: **119.5 lm/w**
Report[2]: STMR-2867

Wide Flood, 1000lm engine, 55 lm/W at 16W

30° Horizontal Aiming

Distance			Beam	
D	C	F.C.	L	W
6	3.5	47	8.9	7.1
8	4.6	26	11.9	9.4
10	5.8	17	14.9	11.8
12	6.9	12	17.8	14.1

30° Vertical Aiming

Distance			Beam	
D	C	F.C.	L	W
2	3.5	81	36.9	4.1
3	5.2	36	55.3	6.1
4	6.9	20	73.7	8.2
5	8.7	13	92.2	10.2

1. Correlated Color Temperature within specs as defined in ANSI_NEMA_ANSLG C78.377-2008: Specifications for the Chromaticity of Solid State Lighting Products.
2. Tested using absolute photometry as specified in LM79: IESNA Approved Method for the Electrical and Photometric Measurements of Solid-State Lighting Products.

C4RA/C4SA Calculite LED 4" gen 3

Round & Square Adjustable Accent

Aiming angles

L and **W** are the outer points where the candle power drops to 50% of the maximum. **FC** are the initial footcandles at the center of the beam. Data shown is for 3000K, use the table on the right for CRI/CCT adjustment factors.

FC	Footcandles
L	Beam length
W	Beam Width
D	Distance
A	Aiming Angle
C	Distance to center beam
CBCP	Center Beam Candlepower

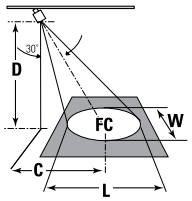

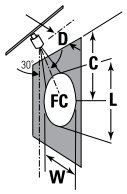

Adjustment Factors

Standard	Shallow 1" Regress	CCT (90CRI)	Lumens
CL = 105%	WT = 112%	4000K = 104%	1500lm = 130%
CC = 100%	D = 100%	3500K = 100%	1000lm = 100%
CD = 80%	BZ = 77%	3000K = 96%	750lm = 70%
WH = 80%	BT = 74%	2700K = 90%	500lm = 50%
CZ = 78%			
BK = 40%			

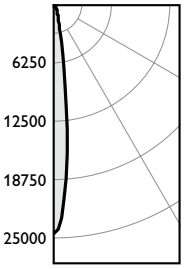

Frame: **4ASN**
Engine: **C4SA20935NSZ10U**
Trim: **C4SACD**

Output lumens:	2028 lms
Input watts:	23.4 W
CRI:	90 min
CCT[1]:	3500 K
CBCP:	24,525 cd
Beam Angle:	13°

Efficacy: **86.7 lm/w**
Report[2]: STMR-3344

Narrow Spot, 2000lm engine, 113lm/W at 19W

30° Horizontal Aiming

Distance			Beam	
D	C	F.C.	L	W
10	5.8	159	3.1	2.6
12	6.9	111	3.7	3.2
14	8.1	81	4.3	3.7
18	10.4	49	5.5	4.7

30° Vertical Aiming

Distance			Beam	
D	C	F.C.	L	W
3	5.2	341	2.8	1.4
4	6.9	192	3.8	1.8
5	8.7	123	4.7	2.3
6	10.4	85	5.7	2.7

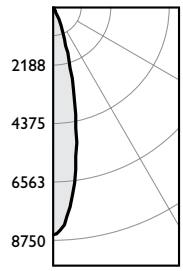

Frame: **4ASN**
Engine: **C4SA20935NFZ10U**
Trim: **C4SACD**

Output lumens:	1748 lms
Input watts:	17.0 W
CRI:	90 min
CCT[1]:	3500 K
CBCP:	8,545 cd
Beam Angle:	24°

Efficacy: **102.8 lm/w**
Report[2]: STMR-3345

Narrow Flood, 2000lm engine, 103lm/W at 17W

30° Horizontal Aiming

Distance			Beam	
D	C	F.C.	L	W
6	3.5	154	3.5	2.9
8	4.6	87	4.6	3.9
10	5.8	56	5.8	4.9
12	6.9	39	6.9	5.9

30° Vertical Aiming

Distance			Beam	
D	C	F.C.	L	W
2	3.5	267	3.9	1.7
3	5.2	119	5.9	2.6
4	6.9	67	7.9	3.4
5	8.7	43	9.8	4.3

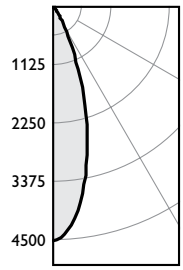

Frame: **4ASN**
Engine: **C4SA20935FLZ10U**
Trim: **C4SACD**

Output lumens:	1648 lms
Input watts:	17.0 W
CRI:	90 min
CCT[1]:	3500 K
CBCP:	4,497 cd
Beam Angle:	33°

Efficacy: **96.9 lm/w**
Report[2]: STMR-3346

Flood, 2000lm engine, 97lm/W at 17W

30° Horizontal Aiming

Distance			Beam	
D	C	F.C.	L	W
6	3.5	81	4.9	4.1
8	4.6	46	6.5	5.5
10	5.8	29	8.1	6.8
12	6.9	20	9.8	8.2

30° Vertical Aiming

Distance			Beam	
D	C	F.C.	L	W
2	3.5	141	6.4	2.4
3	5.2	62	9.6	3.6
4	6.9	35	12.9	4.7
5	8.7	22	16.1	5.9

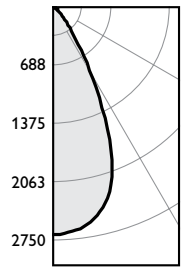

Frame: **4ASN**
Engine: **C4SA20935WFZ10U**
Trim: **C4SACD**

Output lumens:	1998 lms
Input watts:	17.0 W
CRI:	90 min
CCT[1]:	3500 K
CBCP:	2,670 cd
Beam Angle:	52°

Efficacy: **117.5 lm/w**
Report[2]: STMR-3347

Wide Flood, 2000lm engine, 118lm/W at 17W

30° Horizontal Aiming

Distance			Beam	
D	C	F.C.	L	W
6	3.5	48	8.5	6.8
8	4.6	27	11.3	9.0
10	5.8	17	14.1	11.3
12	6.9	12	17.0	13.5

30° Vertical Aiming

Distance			Beam	
D	C	F.C.	L	W
2	3.5	83	27.3	3.9
3	5.2	37	40.9	5.9
4	6.9	21	54.5	7.8
5	8.7	13	68.1	9.8

1. Correlated Color Temperature within specs as defined in ANSI_NEMA_ANSLG C78.377-2008: Specifications for the Chromaticity of Solid State Lighting Products.
2. Tested using absolute photometry as specified in LM79: IESNA Approved Method for the Electrical and Photometric Measurements of Solid-State Lighting Products.

© 2025 Signify Holding. All rights reserved. The information provided herein is subject to change, without notice. Signify does not give any representation or warranty as to the accuracy or completeness of the information included herein and shall not be liable for any action in reliance thereon. The information presented in this document is not intended as any commercial offer and does not form part of any quotation or contract, unless otherwise agreed by Signify.

Signify North America Corporation
400 Crossing Blvd, Suite 600
Bridgewater, NJ 08807
Telephone: 800-555-0050

Signify Canada Ltd.
281 Hillmount Road,
Markham, ON, Canada L6C 2S3
Telephone: 800-668-9008

All trademarks are owned by Signify Holding or their respective owners.

LEDALITE

Linear

TruGroove

Wall micro (lens)

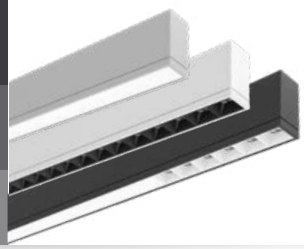

1.75" aperture

TruGroove wall micro (lens) drives performance beyond the edge. Innovative optics deliver exceptional uniformity from a 1.75" aperture continuous line of light. Unique Quad Optic louver cells offer a wide range of options from graze to stack to asymmetric exceeding the demands of the most challenging spaces.

TruGroove wall micro includes AccuRender technology for the highest color quality at the highest efficacy

Project:

Location:

Cat.No:

Type:

Line ID: Qty:

Notes:

Ordering guide [12]

example: TM25L940WGPC230W5008DS1NRAW, WA-48

Family	Version	Distribution	Source	CRI/CCT [1]
TM TruGroove micro	**2** Wall	**1** Direct **3** Indirect **5** Indirect / Direct **6** Direct / Indirect	**L** LED	**950** CRI 90, 5000K **940** CRI 90, 4000K **935** CRI 90, 3500K **930** CRI 90, 3000K **927** CRI 90, 2700K **9T2** CRI 90, 2700-6500K 2ch Tunable White (confirm controls) [5,8]

Optics (Direct)			Lumens (Direct)[1]	Optics (Indirect)	Lumens (Indirect)[1]	Run Length
Lens **Optic** **N** No lens (specify direct louver) **W** Performance Asymmetric **B*** Definition Symmetric Flush Black **L** Definition Symmetric Flush Silk **D*** Definition Symmetric Drop Silk **Note:** To specify a lens/louver combination please select both lens and louver options * Coming soon	**Louver cell*** (specifiy Quad Optic, color, length, position) **Quad Optic** **N** No louver (specify direct lens) **G** Performance 17° Graze Beam w/MesoOptics **W** Performance 20° Asymmetric w/MesoOptics **Color** **N** None **B** Black **W** White **P** Platinum **G** Gold **C** Copper **Length** [15] **N** None **C** 6in (3 Cells) **1** 1ft (6 Cells) **F** Full length **Position** [15] **N** None **L** Left end **R** Right end **2** Both ends **F** Full length		**NN** None **40** 4000 lm/4ft **35** 3500 lm/4ft **30** 3000 lm/4ft **25** 2500 lm/4ft **20** 2000 lm/4ft **15** 1500 lm/4ft **10** 1000 lm/4ft	**N** None **W** Performance Asymmetric	**NN** None **60** 6000 lm/4ft **50** 5000 lm/4ft **40** 4000 lm/4ft **30** 3000 lm/4ft **20** 2000 lm/4ft **10** 1000 lm/4ft	**02** 2ft **C2** 2.5ft **03** 3ft **C3** 3.5ft **04** 4ft **05** 5ft **06** 6ft **08** 8ft **XX** Continuous run in 6" increments (please specify) **Wall Patterns** [7]

Voltage	Driver	Circuit [2,10]	Wiring Option [2,10]	System / Controls [9]	Finish	Mount Type
D UNV 120-277V **3** 347V [3]	**E** Advance Xitanium 0-10V (1% Dim)	**1** Single Circuit **V** Single Circuit + 1 Thru Wire (BP Trigger) [11] **F** Single Circuit + 4 Thru Wires (Mains & Dimming) [11] **G** Dual Circuit (Up/Down) **W** Dual Circuit (Up/Dn) + 1 Thru Wire (BP Trigger) [11]	**N** None **B** Battery Pack [3] **E** Aux. Wiring [6] **G** GTD [3] (please specify voltage)	**NN** None	**W** Standard White **T** Titanium Silver **B** Black **G** Graphite Grey **C** Custom (please specify)	**WA** Wall mounted
D UNV 120-277V	**D** Advance Xitanium DALI (5% Dim) [3] **H** Lutron EcoSystem LDE1 (<1% Dim, Fade-to-Black) [3]					
D UNV 120-277V	**S** Advance Xitanium SR (1% Dim) [3]	**1** Single Circuit **V** Single Circuit + 1 Thru Wire (BP Trigger) [11]	**N** None **B** Battery Pack [3] **R** UL924 Sensor Bypass Relay [13]	**NN** None **RA** Interact Pro RF sensor, enables wireless connected-lighting control [4,14]		

1. Nominal values within a range. Not all lumen packages are available with all configurations. Consult photometry data for CRI, color temp, lumens & distribution of chosen configuration.
2. Not all wiring types are available with all configurations. Consult Ledalite for a complete list of available options.
3. 347V not available with Battery Pack, GTD, DALI, Lutron EcoSystem or Sensor Ready drivers or Interact Pro options. Battery packs available in modules > 4ft (lumen package limits may apply, check with Ledalite)
4. Interact Pro options require separate controls hardware by Signify.
5. Tunable White is available. Please enquire about options for Tunable White with DALI (DT6 or DT8), 0-10V, Lutron T Series or DMX control (extended lead times may apply).
6. Auxiliary Wiring not available with Interact Pro luminaires. Aux sections are wired to one fixture end only.
7. Please inquire about options for wall mounted corners, custom angles and intersections (extended lead times may apply).
8. Tunable White not available with Louver Cell optics.
9. Sensors are only available in white, but can be combined with any luminaire finish.
10. Luminaires are pre-wired to both ends with quick wire connectors at one end for standard circuit & battery pack trigger wire (if applicable). Each circuit has its own neutral conductor. All circuits are clearly labelled at each end.
11. Thru Wire options can provide either one additional set of (4) power and dimming wires (Black/White/Purple/Grey or Pink) or one additional battery pack trigger wire (Orange) through a selected module, please consult factory for other Thru Wire options.
12. Other options not shown here may also be possible via a custom request. Extended lead times and minimum order quantities may apply, please consult factory.
13. UL924 listed sensor bypass relay is factory installed between driver & sensor. Must be ordered in same module as integral sensing option. Must be installed in conjunction with a UL1008 device.
14. Must order IRT9015 Interact commissioning remote with each system order.
15. Combination modules with louver cells and a flush lens may be specified for modules ≥ 4ft by using the "Louver Cell Length" and "Louver Cell Position" options.
16. Signify sensor options shown in the order guide. Third party sensors also available, please enquire about options for Lutron Athena, Vive, or others.

Note: Due to continuing product improvements, Ledalite reserves the right to change the specifications without notice.

DLC Note: Not all product variations listed on this page are DLC qualified. To ensure that a specific model is qualified, visit **www.designlights.org/search**

TruGroove wall micro (lens)

Options and dimensions

Standalone

Keep it simple with standalone modules, available in 8 standard lengths (consult Ledalite for custom lengths).

2ft
2.5ft
3ft
3.5ft
4ft
5ft
6ft
8ft

Continuous Run

Create an uninterrupted ribbon of light with continuous runs, specifiable to 6 in.

Patterns

Contact Ledalite for wall mounted corners, custom angles and intersections (extended lead times may apply).



Flush lens

TruGroove wall micro with 1.75” wide Flush MesoOptics or Silk lens.

Direct/Indirect



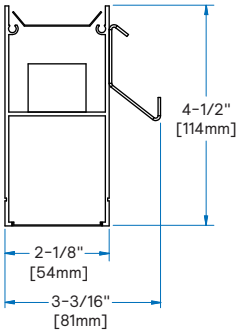

Direct



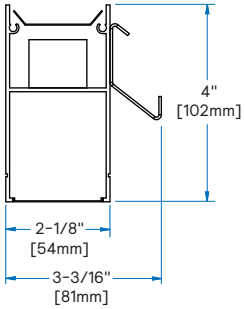

Indirect

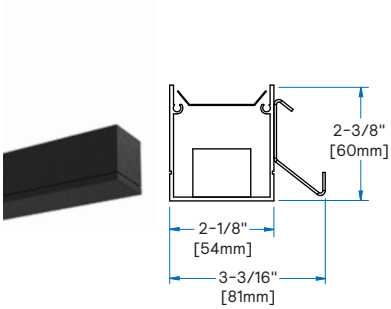

Louver

TruGroove wall micro with Ledalite's unique quad optic louver cells with MesoOptics in 6 distributions.

Direct/Indirect



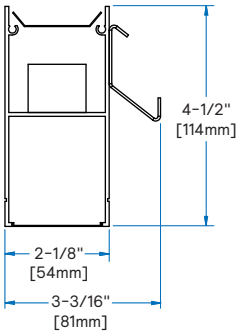

Direct



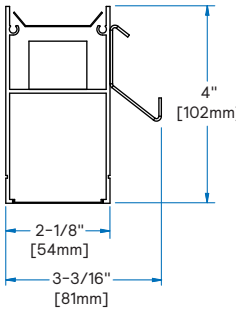

Louvers can be ordered at the full fixture length or in 6 in. or 1 ft sections at one or both ends of a fixture in combination with a lens.



Drop lens and black lens

TruGroove wall micro with drop lens and black lens options.

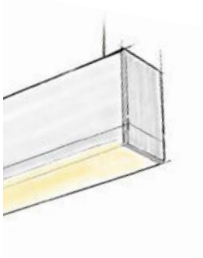



TruGroove wall micro (lens)

Options and dimensions

Side Views

Standalone

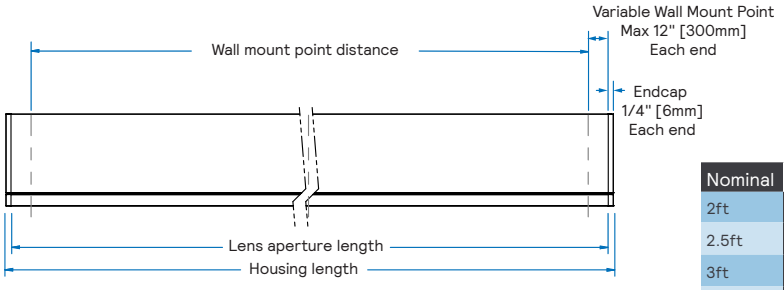

Nominal	Housing	Lens Aperture	Wall Mount Point Distance
2ft	24.5" [622mm]	24.0" [610mm]	Min 2, within 12" of extruded housing ends
2.5ft	30.5" [775mm]	30.0" [762mm]	Min 2, within 12" of extruded housing ends
3ft	36.5" [927mm]	36.0" [914mm]	Min 2, within 12" of extruded housing ends
3.5ft	42.5" [1080mm]	42.0" [1067mm]	Min 2, within 12" of extruded housing ends
4ft	48.5" [1232mm]	48.0" [1219mm]	Min 2, within 12" of extruded housing ends
5ft	60.5" [1537mm]	60.0" [1524mm]	Min 3, within 12" of ends of extruded housing and one centrally located within 12" of center point.
6ft	72.5" [1842mm]	72.0" [1829mm]	Min 3, within 12" of ends of extruded housing and one centrally located within 12" of center point.
8ft	69.5" [2451mm]	96.0" [2438mm]	Min 3, within 12" of ends of extruded housing and one centrally located within 12" of center point.

Continuous Run (Mid-run)

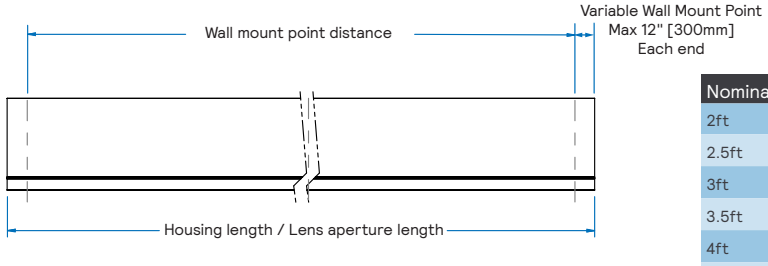

Nominal	Housing	Lens Aperture	Wall Mount Point Distance
2ft	24.0" [610mm]	24.0" [610mm]	Min 2, within 12" of extruded housing ends
2.5ft	30.0" [762mm]	30.0" [762mm]	Min 2, within 12" of extruded housing ends
3ft	36.0" [914mm]	36.0" [914mm]	Min 2, within 12" of extruded housing ends
3.5ft	42.0" [1067mm]	42.0" [1067mm]	Min 2, within 12" of extruded housing ends
4ft	48.0" [1219mm]	48.0" [1219mm]	Min 2, within 12" of extruded housing ends
5ft	60.0" [1524mm]	60.0" [1524mm]	Min 3, within 12" of ends of extruded housing and one centrally located within 12" of center point.
6ft	72.0" [1829mm]	72.0" [1829mm]	Min 3, within 12" of ends of extruded housing and one centrally located within 12" of center point.
8ft	96.0" [2438mm]	96.0" [2438mm]	Min 3, within 12" of ends of extruded housing and one centrally located within 12" of center point.

Continuous Run (End-run)

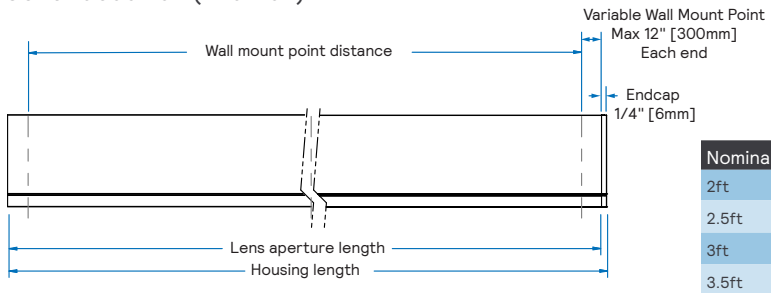

Nominal	Housing	Lens Aperture	Wall Mount Point Distance
2ft	24.25" [616mm]	24.0" [610mm]	Min 2, within 12" of extruded housing ends
2.5ft	30.25" [768mm]	30.0" [762mm]	Min 2, within 12" of extruded housing ends
3ft	36.25" [921mm]	36.0" [914mm]	Min 2, within 12" of extruded housing ends
3.5ft	42.25" [1073mm]	42.0" [1067mm]	Min 2, within 12" of extruded housing ends
4ft	48.25" [1226mm]	48.0" [1219mm]	Min 2, within 12" of extruded housing ends
5ft	60.25" [1530mm]	60.0" [1524mm]	Min 3, within 12" of ends of extruded housing and one centrally located within 12" of center point.
6ft	72.25" [1842mm]	72.0" [1829mm]	Min 3, within 12" of ends of extruded housing and one centrally located within 12" of center point.
8ft	96.25" [2445mm]	96.0" [2438mm]	Min 3, within 12" of ends of extruded housing and one centrally located within 12" of center point.

TruGroove wall micro (lens)

Specifications

Optical System

Direct hemisphere: Light emitted from a linear array of downward-facing LEDs is laterally redirected using optical microstructures embedded in a layer of MesoOptics DX film to generate an optimal asymmetric distribution and a uniform continuum of light. The available Flush Silk lens is a value-oriented option that provides a lambertian distribution while maintaining a uniform continuum of light.

Additionally, Ledalite's unique Quad Optic Louver Cell provides tailored optical distributions with reduced glare.

Indirect hemisphere: White light emitted from a linear array of upward-facing LEDs is shaped into a homogeneous, wide-throw low peak angle asymmetric distribution using an engineered light guide panel.

Housing

Post painted precision aluminum extrusion.

Endcaps

Diecast flat aluminum endcaps with integral groove to match housing.

Finish

High quality powder coated, available in standard Matte White, Black, Titanium Silver or Graphite Grey. TruGroove can also be specified in any custom color upon request for a one-time setup charge. Optional sensors (such as Interact Pro) available in white only.

Mounting

Wall: A hidden steel rail and bracket system attaches to the existing structure and supports housings close to the wall. Mount positioning is fully variable along the modules to accommodate site conditions, spaced up to 4-1/2' on center and within 12" of an end or joint.

Joints

Self-aligning joining system with hands-free pre-joining wire access.

Weight

Maximum 3.8/ft (wall)

Electrical

Fixtures are factory pre-wired to section ends with quick-wire connectors and tested for all circuits and backup battery packs. LED boards and drivers are easily field replaceable with access from below the ceiling.

Standard Drivers

Advance Xitanium 0-10V, 1% Dimming.
Advance Xitanium DALI, 5% Dimming.
Advance Xitanium Sensor Ready, 1% Dimming.
Lutron EcoSystem LDE1, 1% Dimming with Soft-On and Fade-to-Black.
Class 2 rated output. Consult Ledalite for other available drivers.

Standard Battery Packs

Bodine Battery Pack, 90 min, 10W, Class 2 rated output.
Lumen output = 10W x luminaire efficacy x 1.1. Typical output ~1200lm.

Lumen Maintenance

LEDs have been tested by the manufacturer in accordance with IESNA LM-80-15. At an ambient temperature of 25°C, the LED lumen maintenance expectation according to IES TM-21-11 is:
L_{80} (10k) > 60,000 hours (Reported methodology).

Source Color

LEDs rated for color rendering of:
CRI $R_a \geq 90$, $R_9 \geq 50$, $G_a \geq 97$, $C_9 \geq 90$
IES TM-30-18 : $R_f \geq 90$, $R_{f,h1} \geq 89$, $R_g \geq 99$, $R_{cs,h1} \geq -5\%$

SPD and TM-30-18 reports available upon request

Fixture to fixture color accuracy within:
2 SDCM for Static White luminaires
3 SDCM for Tunable White luminaires

Approvals

Certified to UL, IES & CSA Standards.

Certain versions without battery packs are DesignLights Consortium qualifies. Please see the DLC QPL list for exact catalog numbers. www.designlights.org/QPL

Select TruGroove micro configurations contribute toward satisfying features L03, L04, L06, L07 and L08 under the WELL v2 Building Standard®.

TruGroove is Declare label certified. More information on the TruGroove label can be found on https://declare.living-future.org/ and through the Declare ID **SGY-0007**.

Environment

Rated for dry or damp locations in operating ambient temperatures of 0-25°C (32-77°F).

Many luminaire components, such as reflectors, refractors, lenses, and LEDs are made from various types of plastics which can be adversely affected by airborne contaminants. If sulfur-based chemicals, petroleum-based products, cleaning solutions, or other contaminants are expected in the intended area of use, consult factory for compatibility. Damage caused by sulfur, chlorine, petroleum-based solution or other contaminants are not covered under warranty. Not suitable for natatorium environments.

Warranty

Five-year luminaire limited warranty including LED boards and driver: www.signify.com/warranties

QuickShip

10-day QuickShip available for most configurations upon request. More information available at: www.signify.com/en-us/brands/ledalite/quickship

TruGroove wall micro (lens)

Wireless Controls Options

Radio only sensor (RA):

- Integral RADIO only sensor simply enables wireless mesh connectivity to the luminaire without any occupancy or daylight sensing.
- Ideal for applications where sensing functionality is managed by other Interact devices and the luminaire only needs to have wireless connectivity.
- Interact Pro includes an App, a portal and a broad portfolio of wireless luminaires, lamps and retrofit kits all working on the same system.
- Startup is implemented via Interact Pro App (Android or iPhone) & Bluetooth connectivity. The App provides flexibility to choose between a gateway or non-gateway mode for setup.
- Setup with the gateway requires wired internet access to the gateway. It is possible to add a gateway at a later point.
- Prepare project configuration steps remotely, identify and group devices together onsite.
- Compatible with UID8451/10 wireless dimmer switch, SWS200 wireless scene switch, wireless Occ sensor (OCC SENSOR IA CM IP42 WH 10/1) and wireless Day/Occ sensor (OCC MULTI SENSOR IA CM WH 10/1).
- For more information on Interact Pro visit: www.interact-lighting.com/interactproscalablesystem

Emergency Options (R):

- Power Sensing (Factory default) – Recommended
- UL924 option requires unswitched power sense line, absence of voltage on the normal circuit triggers luminaire to 100% output.
- Power Interruption Detection (Field option)
- Detects AC power interruption >30ms triggers 90 minute emergency mode with luminaire at 100% output.

Wired Controls Options

Tunable White:

- Tunable White is available in control options for Tunable White with DALI (DT6 or DT8), 0-10V, or DMX control are available via an Engineered-to-Order (ETO) request.
- Signify tunable white solutions are designed to help maximize the influence of lighting on your daily life.
- Dynamic behaviors via scheduled lighting recipes mimicking daylight patterns or supporting biorhythms.
- Scene setting via lighting pre-sets based on various combinations of lighting color temperature and intensity.

Interact Pro scalable sensor option codes across Genlyte product lines				
	Evokit	Day-Brite	Ledalite	Lightolier
ZeeBee + Bluetooth + Sensing	SWZCS	SWZCS	CS	SBA accessory (external)
ZeeBee + Bluetooth	RADIO	RADIO	RA	RA
ZeeBee + Bluetooth + Sensing + Environmental data	IAOSB	IAOSB	SB	SB
ZeeBee + Highbay + Sensing	-	SWZCSH	-	-

TruGroove wall micro (lens)

Functionalities overview

	The three tiers of Interact		
			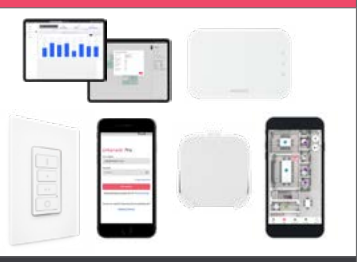
	Standalone	Gateway	Gateway + IoT
Dimming, grouping, and zoning	✓	✓	✓
Bluetooth and ZigBee enabled	✓	✓	✓
Motion sensing and daylight harvesting	✓	✓	✓
Integration with 0–10V and phase dimming fixtures	✓	✓	✓
Code compliance	✓	✓	✓
Granular dimming and dwell time	✓	✓	✓
New Correlated color temperature (CCT) tuning by switch	✓	✓	✓
New Support for sensor-based Tunable White luminaires	✓	✓	✓
Energy reporting and monitoring		✓	✓
Scheduling		✓	✓
Demand response		✓	✓
BMS integration (BACnet)			✓
Floor plan visualization			✓
IoT sensors for wellness			✓
IoT Apps for productivity			✓

Currently supported maximum system size

To be able to design the lighting system correctly for the customer, it is important to know the prime characteristics of the system, its possibilities and limitations.

System level	
Total number of gateways	Unlimited
Total number of devices	200 per network
• luminaires with integrated sensors	150
• smart TLEDS	150
Total number of ZGP devices (sensors and switches)	50
• sensors	30
• switches	50
• zones and groups	64
Group level	
Recommended number of lights	40 (recommended 25)
Number of ZGP devices	5
Number of scenes	16

Interact system architecture for office, education, healthcare, retail, industrial and parking applications

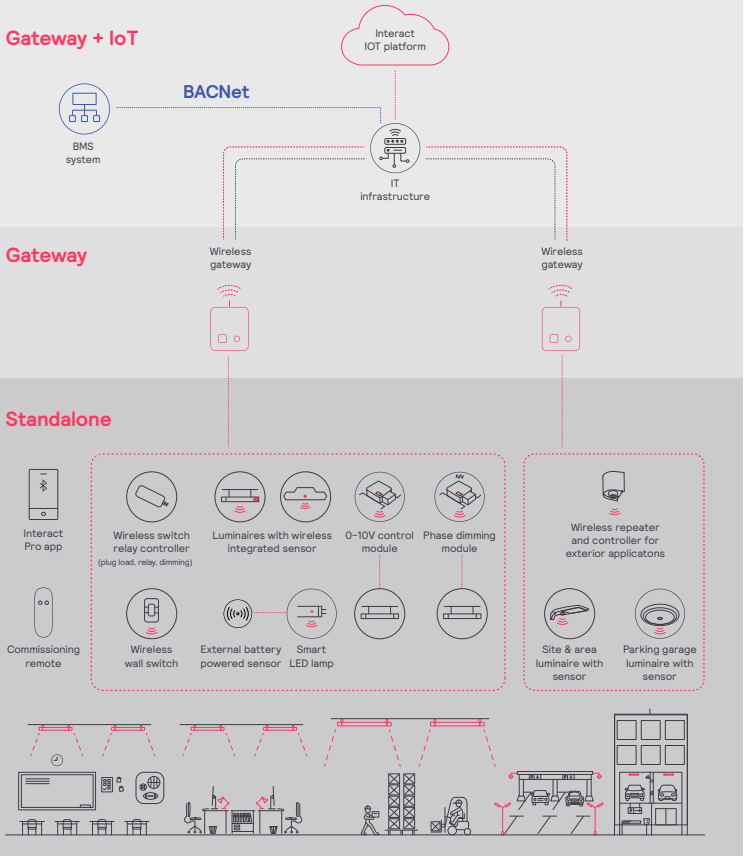

TruGroove wall micro (lens)

Colorimetry

TruGroove micro (TMxx) AccuRender Static White

Nominal CRI &CCT		CRI 90, 2700K	CRI 90, 3000K	CRI 90, 3500K	CRI 90, 4000K	CRI 90, 5000K
CIE 013.3-1995 [1]	CRI R_a	94	93	93	93	93
	R_g	55	57	59	64	68
	G_a	99	99	99	99	99
	C_g	93	93	93	93	94
IES TM-30-18 [2]	R_f	92	91	91	91	90
	$R_f h_1$	90	90	90	91	89
	R_g	100	100	99	100	100
	R_{cs}, h_1	-6%	-5%	-6%	-5%	-5%
MDER [3]		0.45	0.51	0.58	0.65	0.81

1. Color Rendering Index (CRI Ra) and Strong Red (R9) are calculated in accordance with CIE 013.3-1995. Color Gamut index (Ga) and red chroma Index (C9) are CIE based properties using the Global Lighting Association's calculation tool.
2. Fidelity Index (Rf), Red Fidelity Index (Rf,h1), Gamut Index (Rg), and Red Local Chroma Shift (Rcs,h1) are calculated in accordance with IES TM-30-18.
3. Melanopic Daylight Efficacy Ratio (MDER) is the measure for "spectral melanopic efficiency" as defined in CIE S 026-2018.

Photometry

The following pages contain photometry for TruGroove suspended micro with louvers.

Photometry for TruGroove suspended micro with louver can be found by scanning the QR code or following the link: https://www.signify.com/api/assets/v1/file/Signify/content/3eff19e7cd0149d3b315ae6e011776fc/TruGroove_Wall_Micro_Louver_SpecSheet.pdf

TruGroove wall micro (lens)

Photometry

Direct (TM21) Performance Asymmetric Flush MesoOptic lens

Nominal CRI &CCT			CRI 90, 2700K					CRI 90, 3000K					CRI 90, 3500K					CRI 90, 4000K					CRI 90, 5000K				
Nominal Lumen Package (lm/4ft)		Watts	Flux (lm/4ft) [1]	Efficacy (LPW) [1]	UGR [5]	Photometry Report	IES File	Flux (lm/4ft) [1]	Efficacy (LPW) [1]	UGR [5]	Photometry Report	IES File	Flux (lm/4ft) [1]	Efficacy (LPW) [1]	UGR [5]	Photometry Report	IES File	Flux (lm/4ft) [1]	Efficacy (LPW) [1]	UGR [5]	Photometry Report	IES File	Flux (lm/4ft) [1]	Efficacy (LPW) [1]	UGR [5]	Photometry Report	IES File
Direct	Indirect																										
4000	NA	43.1	3,641	84.5	24.9	PDF	IES	3,735	86.7	25.0	PDF	IES	3,870	89.8	25.1	PDF	IES	3,911	90.7	25.1	PDF	IES	3,957	91.8	25.2	PDF	IES
3500	NA	37.3	3,190	85.5	24.4	PDF	IES	3,266	87.6	24.5	PDF	IES	3,388	90.8	24.6	PDF	IES	3,426	91.8	24.7	PDF	IES	3,463	92.8	24.7	PDF	IES
3000	NA	31.6	2,743	86.8	23.9	PDF	IES	2,803	88.7	24.0	PDF	IES	2,912	92.2	24.1	PDF	IES	2,944	93.2	24.2	PDF	IES	2,974	94.1	24.2	PDF	IES
2500	NA	26.4	2,284	86.5	23.3	PDF	IES	2,332	88.3	23.3	PDF	IES	2,425	91.9	23.5	PDF	IES	2,451	92.8	23.5	PDF	IES	2,475	93.8	23.6	PDF	IES
2000	NA	20.7	1,832	88.5	22.5	PDF	IES	1,869	90.3	22.6	PDF	IES	1,945	94.0	22.7	PDF	IES	1,965	94.9	22.7	PDF	IES	1,984	95.8	22.8	PDF	IES
1500	NA	15.9	1,371	86.2	21.5	PDF	IES	1,399	88.0	21.6	PDF	IES	1,458	91.7	21.7	PDF	IES	1,470	92.5	21.7	PDF	IES	1,485	93.4	21.8	PDF	IES
1000	NA	11.2	904	80.7	20.0	PDF	IES	922	82.3	20.1	PDF	IES	962	85.9	20.3	PDF	IES	968	86.4	20.3	PDF	IES	979	87.4	20.3	PDF	IES

Direct (TM21) Definition Symmetric Flush Silk lens

Nominal CRI &CCT			CRI 90, 2700K					CRI 90, 3000K					CRI 90, 3500K					CRI 90, 4000K					CRI 90, 5000K				
Nominal Lumen Package (lm/4ft)		Watts	Flux (lm/4ft) [1]	Efficacy (LPW) [1]	UGR [5]	Photometry Report	IES File	Flux (lm/4ft) [1]	Efficacy (LPW) [1]	UGR [5]	Photometry Report	IES File	Flux (lm/4ft) [1]	Efficacy (LPW) [1]	UGR [5]	Photometry Report	IES File	Flux (lm/4ft) [1]	Efficacy (LPW) [1]	UGR [5]	Photometry Report	IES File	Flux (lm/4ft) [1]	Efficacy (LPW) [1]	UGR [5]	Photometry Report	IES File
Direct	Indirect																										
4000	NA	43.1	3,955	91.8	27.2	PDF	IES	4,058	94.2	27.3	PDF	IES	4,204	97.5	27.4	PDF	IES	4,249	98.6	27.4	PDF	IES	4,299	99.7	27.5	PDF	IES
3500	NA	37.3	3,466	92.9	26.7	PDF	IES	3,548	95.1	26.8	PDF	IES	3,681	98.7	26.9	PDF	IES	3,721	99.8	27.0	PDF	IES	3,762	100.9	27.0	PDF	IES
3000	NA	31.6	2,980	94.3	26.2	PDF	IES	3,045	96.4	26.3	PDF	IES	3,163	100.1	26.4	PDF	IES	3,198	101.2	26.4	PDF	IES	3,231	102.2	26.5	PDF	IES
2500	NA	26.4	2,482	94.0	25.6	PDF	IES	2,533	95.9	25.6	PDF	IES	2,634	99.8	25.8	PDF	IES	2,662	100.8	25.8	PDF	IES	2,688	101.8	25.8	PDF	IES
2000	NA	20.7	1,990	96.1	24.8	PDF	IES	2,031	98.1	24.9	PDF	IES	2,113	102.1	25.0	PDF	IES	2,135	103.1	25.0	PDF	IES	2,155	104.1	25.1	PDF	IES
1500	NA	15.9	1,490	93.7	23.8	PDF	IES	1,520	95.6	23.9	PDF	IES	1,583	99.6	24.0	PDF	IES	1,597	100.4	24.0	PDF	IES	1,613	101.4	24.1	PDF	IES
1000	NA	11.2	982	87.7	22.3	PDF	IES	1,002	89.5	22.4	PDF	IES	1,045	93.3	22.5	PDF	IES	1,052	93.9	22.6	PDF	IES	1,063	94.9	22.6	PDF	IES

1. 4ft Luminaire photometry has been conducted in accordance with IES LM-79-08. IES files can be downloaded by clicking the links in the table above, or online at ledalite.com. Luminaires with finishes other than standard white may result in a drop in flux and efficacy.
2. Unified Glare Ratio (UGR) is calculated in accordance with CIE 117-1995. Reference conditions of 4Hx8Hx1H and reflectances of 70/50/20% have been applied using the procedure described in CIE 190-2010.

Performance Asymmetric
Flush MesoOptic lens
Spacing Criteria: 1.44/1.23

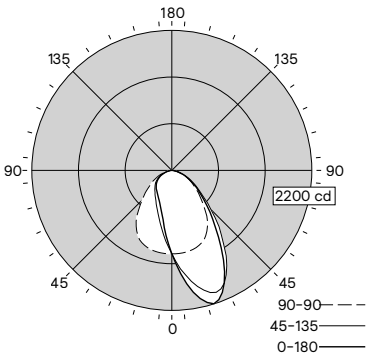

100% Down / 0% Up

Definition Symmetric
Flush Silk lens
Spacing Criteria: 1.23/1.22

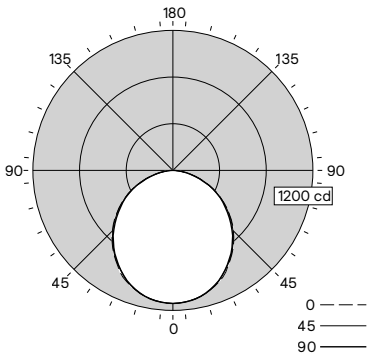

100% Down / 0% Up

Candela plots shown are for 3000lm/4ft, CRI 90, 3500K configurations.

TruGroove wall micro (lens)

Photometry

Indirect (TM23) Performance Asymmetric lens

Nominal CRI &CCT			CRI 90, 2700K					CRI 90, 3000K					CRI 90, 3500K					CRI 90, 4000K					CRI 90, 5000K				
Nominal Lumen Package (lm/4ft)		Watts	Flux (lm/4ft) [1]	Efficacy (LPW) [1]	UGR [5]	Photometry Report	IES File	Flux (lm/4ft) [1]	Efficacy (LPW) [1]	UGR [5]	Photometry Report	IES File	Flux (lm/4ft) [1]	Efficacy (LPW) [1]	UGR [5]	Photometry Report	IES File	Flux (lm/4ft) [1]	Efficacy (LPW) [1]	UGR [5]	Photometry Report	IES File	Flux (lm/4ft) [1]	Efficacy (LPW) [1]	UGR [5]	Photometry Report	IES File
Direct	Indirect																										
NA	6000	57.3	5,602	97.8	N/A	PDF	IES	5,759	100.5	N/A	PDF	IES	6,008	104.9	N/A	PDF	IES	6,079	106.1	N/A	PDF	IES	6,212	108.4	N/A	PDF	IES
NA	5000	45.6	4,681	102.7	N/A	PDF	IES	4,815	105.6	N/A	PDF	IES	5,007	109.8	N/A	PDF	IES	5,075	111.3	N/A	PDF	IES	5,187	113.8	N/A	PDF	IES
NA	4000	35.7	3,753	105.1	N/A	PDF	IES	3,859	108.1	N/A	PDF	IES	4,000	112.0	N/A	PDF	IES	4,060	113.7	N/A	PDF	IES	4,153	116.3	N/A	PDF	IES
NA	3000	26.4	2,824	107.0	N/A	PDF	IES	2,904	110.0	N/A	PDF	IES	3,001	113.7	N/A	PDF	IES	3,051	115.6	N/A	PDF	IES	3,120	118.2	N/A	PDF	IES
NA	2000	17.3	1,888	109.1	N/A	PDF	IES	1,945	112.4	N/A	PDF	IES	2,004	115.8	N/A	PDF	IES	2,040	117.9	N/A	PDF	IES	2,082	120.3	N/A	PDF	IES
NA	1000	9.5	939	98.8	N/A	PDF	IES	970	102.1	N/A	PDF	IES	995	104.7	N/A	PDF	IES	1,017	107.1	N/A	PDF	IES	1,033	108.7	N/A	PDF	IES

1. 4ft Luminaire photometry has been conducted in accordance with IES LM-79-08. IES files can be downloaded by clicking the links in the table above, or online at ledalite.com. Luminaires with finishes other than standard white may result in a drop in flux and efficacy.
2. Unified Glare Ratio (UGR) is calculated in accordance with CIE 117-1995. Reference conditions of 4Hx8Hx1H and reflectances of 70/50/20% have been applied using the procedure described in CIE 190-2010.

Performance Asymmetric lens

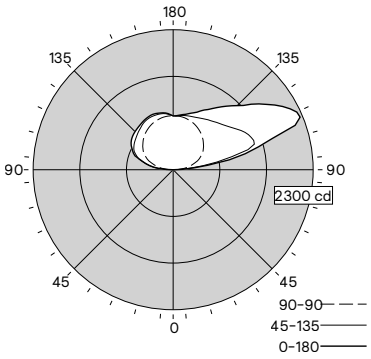

0% Down / 100% Up

Candela plots shown are for 5000lm/4ft, CRI 90, 3500K configurations.

TruGroove wall micro (lens)

Photometry

Direct/Indirect (TM25 & TM26) Performance Asymmetric Flush MesoOptic lens

Nominal CRI &CCT			CRI 90, 2700K					CRI 90, 3000K					CRI 90, 3500K					CRI 90, 4000K					CRI 90, 5000K				
Nominal Lumen Package (lm/4ft)		Watts	Flux (lm/4ft) [1]	Efficacy (LPW) [1]	UGR [5]	Photometry Report	IES File	Flux (lm/4ft) [1]	Efficacy (LPW) [1]	UGR [5]	Photometry Report	IES File	Flux (lm/4ft) [1]	Efficacy (LPW) [1]	UGR [5]	Photometry Report	IES File	Flux (lm/4ft) [1]	Efficacy (LPW) [1]	UGR [5]	Photometry Report	IES File	Flux (lm/4ft) [1]	Efficacy (LPW) [1]	UGR [5]	Photometry Report	IES File
Direct	Indirect																										
4000	6000	100.4	9,243	92.1	19.7	PDF	IES	9,494	94.6	19.7	PDF	IES	9,878	98.4	19.9	PDF	IES	9,990	99.5	19.9	PDF	IES	10,169	101.3	20.0	PDF	IES
	5000	88.7	8,321	93.8	20.2	PDF	IES	8,550	96.4	20.3	PDF	IES	8,877	100.1	20.4	PDF	IES	8,987	101.3	20.4	PDF	IES	9,144	103.1	20.4	PDF	IES
	4000	78.8	7,394	93.8	20.8	PDF	IES	7,594	96.4	20.7	PDF	IES	7,869	99.9	20.9	PDF	IES	7,972	101.2	20.9	PDF	IES	8,110	102.9	21.0	PDF	IES
	3000	69.3	6,465	93.3	21.4	PDF	IES	6,639	95.8	21.5	PDF	IES	6,871	99.1	21.6	PDF	IES	6,962	100.5	21.6	PDF	IES	7,077	102.1	21.6	PDF	IES
	2000	60.2	5,528	91.8	22.2	PDF	IES	5,680	94.4	22.3	PDF	IES	5,873	97.6	22.5	PDF	IES	5,951	98.9	22.5	PDF	IES	6,039	100.3	22.4	PDF	IES
	1000	52.3	4,580	87.6	23.3	PDF	IES	4,705	90.0	23.4	PDF	IES	4,865	93.0	23.5	PDF	IES	4,928	94.2	23.5	PDF	IES	4,990	95.4	23.6	PDF	IES
3500	6000	94.5	8,792	93.0	18.9	PDF	IES	9,025	95.5	18.9	PDF	IES	9,396	99.4	19.1	PDF	IES	9,504	100.6	19.1	PDF	IES	9,675	102.4	19.1	PDF	IES
	5000	82.9	7,871	94.9	19.4	PDF	IES	8,081	97.5	19.5	PDF	IES	8,395	101.3	19.5	PDF	IES	8,501	102.5	19.5	PDF	IES	8,650	104.3	19.6	PDF	IES
	4000	72.9	6,943	95.2	19.9	PDF	IES	7,125	97.7	20.0	PDF	IES	7,387	101.3	20.1	PDF	IES	7,486	102.7	20.2	PDF	IES	7,616	104.5	20.2	PDF	IES
	3000	63.4	6,014	94.9	20.6	PDF	IES	6,171	97.3	20.7	PDF	IES	6,389	100.8	20.8	PDF	IES	6,476	102.1	20.9	PDF	IES	6,583	103.8	20.8	PDF	IES
	2000	54.3	5,078	93.5	21.4	PDF	IES	5,211	96.0	21.5	PDF	IES	5,392	99.3	21.7	PDF	IES	5,466	100.7	21.7	PDF	IES	5,545	102.1	21.8	PDF	IES
	1000	46.5	4,130	88.8	22.6	PDF	IES	4,236	91.1	22.7	PDF	IES	4,383	94.3	22.9	PDF	IES	4,442	95.5	22.9	PDF	IES	4,496	96.7	22.9	PDF	IES
3000	6000	88.9	8,345	93.9	17.9	PDF	IES	8,562	96.3	18.0	PDF	IES	8,920	100.3	18.1	PDF	IES	9,023	101.5	18.1	PDF	IES	9,186	103.3	18.1	PDF	IES
	5000	77.2	7,424	96.2	18.5	PDF	IES	7,618	98.7	18.5	PDF	IES	7,919	102.6	18.6	PDF	IES	8,019	103.9	18.6	PDF	IES	8,161	105.7	18.6	PDF	IES
	4000	67.3	6,496	96.5	19.0	PDF	IES	6,662	99.0	19.1	PDF	IES	6,911	102.7	19.2	PDF	IES	7,004	104.1	19.3	PDF	IES	7,127	105.9	19.2	PDF	IES
	3000	58.0	5,567	96.0	19.8	PDF	IES	5,708	98.4	19.8	PDF	IES	5,913	101.9	20.0	PDF	IES	5,995	103.4	19.9	PDF	IES	6,094	105.1	20.0	PDF	IES
	2000	48.8	4,631	94.9	20.6	PDF	IES	4,748	97.3	20.7	PDF	IES	4,915	100.7	20.8	PDF	IES	4,984	102.1	20.9	PDF	IES	5,056	103.6	20.9	PDF	IES
	1000	41.1	3,682	89.6	21.9	PDF	IES	3,773	91.8	22.0	PDF	IES	3,906	95.0	22.1	PDF	IES	3,961	96.4	22.2	PDF	IES	4,007	97.5	22.2	PDF	IES
2500	6000	83.5	7,887	94.5	16.8	PDF	IES	8,091	96.9	16.8	PDF	IES	8,433	101.0	16.9	PDF	IES	8,529	102.1	16.9	PDF	IES	8,687	104.0	16.9	PDF	IES
	5000	71.8	6,965	97.0	17.2	PDF	IES	7,146	99.5	17.3	PDF	IES	7,431	103.5	17.5	PDF	IES	7,526	104.8	17.5	PDF	IES	7,662	106.7	17.5	PDF	IES
	4000	61.9	6,038	97.5	17.8	PDF	IES	6,190	100.0	17.9	PDF	IES	6,424	103.8	18.1	PDF	IES	6,511	105.2	18.1	PDF	IES	6,628	107.1	18.1	PDF	IES
	3000	52.8	5,109	96.8	18.7	PDF	IES	5,236	99.2	18.8	PDF	IES	5,426	102.8	18.9	PDF	IES	5,502	104.2	18.9	PDF	IES	5,595	106.0	18.9	PDF	IES
	2000	43.6	4,172	95.7	19.7	PDF	IES	4,277	98.1	19.6	PDF	IES	4,428	101.6	19.9	PDF	IES	4,491	103.0	19.8	PDF	IES	4,557	104.5	19.9	PDF	IES
	1000	35.9	3,224	89.8	21.0	PDF	IES	3,302	92.0	21.1	PDF	IES	3,419	95.2	21.2	PDF	IES	3,467	96.6	21.2	PDF	IES	3,508	97.7	21.3	PDF	IES
2000	6000	77.9	7,434	95.4	15.4	PDF	IES	7,628	97.9	15.4	PDF	IES	7,954	102.1	15.5	PDF	IES	8,044	103.3	15.5	PDF	IES	8,196	105.2	15.5	PDF	IES
	5000	66.2	6,513	98.4	15.8	PDF	IES	6,684	101.0	15.9	PDF	IES	6,952	105.0	16.0	PDF	IES	7,040	106.3	16.1	PDF	IES	7,171	108.3	16.0	PDF	IES
	4000	56.3	5,585	99.2	16.5	PDF	IES	5,728	101.7	16.6	PDF	IES	5,945	105.6	16.7	PDF	IES	6,025	107.0	16.7	PDF	IES	6,137	109.0	16.7	PDF	IES
	3000	46.9	4,656	99.3	17.2	PDF	IES	4,774	101.8	17.3	PDF	IES	4,946	105.5	17.5	PDF	IES	5,016	107.0	17.5	PDF	IES	5,104	108.8	17.6	PDF	IES
	2000	38.0	3,720	97.9	18.4	PDF	IES	3,814	100.4	18.4	PDF	IES	3,949	103.9	18.6	PDF	IES	4,005	105.4	18.5	PDF	IES	4,066	107.0	18.6	PDF	IES
	1000	30.3	2,772	91.5	19.8	PDF	IES	2,839	93.7	19.9	PDF	IES	2,940	97.0	20.0	PDF	IES	2,982	98.4	20.1	PDF	IES	3,018	99.6	20.1	PDF	IES
1500	6000	73.0	6,974	95.5	13.4	PDF	IES	7,159	98.1	13.4	PDF	IES	7,466	102.3	13.6	PDF	IES	7,549	103.4	13.6	PDF	IES	7,697	105.4	13.6	PDF	IES
	5000	61.3	6,052	98.7	14.0	PDF	IES	6,214	101.4	14.0	PDF	IES	6,464	105.4	14.2	PDF	IES	6,545	106.8	14.1	PDF	IES	6,672	108.8	14.2	PDF	IES
	4000	51.4	5,124	99.7	14.7	PDF	IES	5,258	102.3	14.7	PDF	IES	5,457	106.2	14.9	PDF	IES	5,530	107.6	14.8	PDF	IES	5,638	109.7	14.8	PDF	IES
	3000	42.2	4,195	99.4	15.5	PDF	IES	4,304	102.0	15.6	PDF	IES	4,459	105.7	15.7	PDF	IES	4,521	107.1	15.7	PDF	IES	4,605	109.1	15.7	PDF	IES
	2000	33.2	3,259	98.2	16.6	PDF	IES	3,344	100.7	16.6	PDF	IES	3,461	104.2	16.8	PDF	IES	3,510	105.7	16.8	PDF	IES	3,567	107.4	16.8	PDF	IES
	1000	25.4	2,311	91.0	18.2	PDF	IES	2,369	93.3	18.3	PDF	IES	2,452	96.5	18.5	PDF	IES	2,487	97.9	18.5	PDF	IES	2,519	99.2	18.5	PDF	IES
1000	6000	68.1	6,506	95.5	10.6	PDF	IES	6,681	98.1	10.7	PDF	IES	6,970	102.3	10.8	PDF	IES	7,047	103.5	10.8	PDF	IES	7,191	105.6	10.9	PDF	IES
	5000	56.4	5,584	99.0	11.2	PDF	IES	5,737	101.7	11.3	PDF	IES	5,969	105.8	11.4	PDF	IES	6,043	107.1	11.5	PDF	IES	6,166	109.3	11.4	PDF	IES
	4000	46.6	4,657	99.9	11.9	PDF	IES	4,781	102.6	11.9	PDF	IES	4,961	106.5	12.2	PDF	IES	5,028	107.9	12.1	PDF	IES	5,132	110.1	12.1	PDF	IES
	3000	37.6	3,728	99.1	12.8	PDF	IES	3,827	101.8	12.9	PDF	IES	3,963	105.4	13.0	PDF	IES	4,019	106.9	13.0	PDF	IES	4,099	109.0	13.0	PDF	IES
	2000	28.4	2,791	98.3	14.0	PDF	IES	2,867	101.0	14.1	PDF	IES	2,965	104.4	14.2	PDF	IES	3,008	105.9	14.2	PDF	IES	3,061	107.8	14.2	PDF	IES
	1000	20.7	1,843	89.0	15.8	PDF	IES	1,892	91.4	15.9	PDF	IES	1,957	94.5	16.0	PDF	IES	1,985	95.9	16.1	PDF	IES	2,012	97.2	16.1	PDF	IES

1. 4ft Luminaire photometry has been conducted in accordance with IES LM-79-08. IES files can be downloaded by clicking the links in the table above, or online at ledalite.com. Luminaires with finishes other than standard white may result in a drop in flux and efficacy.
2. Unified Glare Ratio (UGR) is calculated in accordance with CIE 117-1995. Reference conditions of 4Hx8Hx1H and reflectances of 70/50/20% have been applied using the procedure described in CIE 190-2010.
3. For Photometry reports and IES files combining Direct/Indirect distributions other than those listed above, please consult Ledalite.

Performance Asymmetric Flush MesoOptic lens
Spacing Criteria: 1.44/1.23

Candela plot shown is for 3000lm/4ft Direct / 5000lm/4ft Indirect, CRI 90, 3500K configuration.

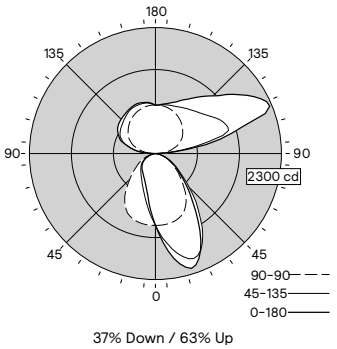

37% Down / 63% Up

© 2025 Signify Holding. All rights reserved. The information provided herein is subject to change, without notice. Signify does not give any representation or warranty as to the accuracy or completeness of the information included herein and shall not be liable for any action in reliance thereon. The information presented in this document is not intended as an commercial offer and does not form part of any quotation or contract, unless otherwise agreed by Signify.

GENLYTE SOLUTIONS
a signify business

Signify North America Corp.
400 Crossing Blvd, Suite 600
Bridgewater, NJ 08807
Telephone: 800-555-0050

Signify Canada Ltd.
281 Hillmount Road,
Markham, ON, Canada L6C 2S3
Telephone: 800-668-9008

All trademarks are owned by Signify Holding or their respective owners.

Day-Brite

CFI

by signify

Linear

OWL wraparound

2', 4', 8'
3000, 4000, 5000, or 7000lm



Day-Brite / CFI OWL LED wraparound is the ideal surface mount general illumnation luminaire for light commercial and residential applications. The high efficiency LED light engine provides exceptional performance coupled with quality visual light.

Project: 25018 WSB
Location: Theater Supply Room
Cat.No:
Type: D4
Lamps: Qty: Refer
Notes:
OWL440L835-UNV-NON

Ordering guide

Example: OWL240L840-UNV-DIM

Series	Length	Lumen Package[2]	Color Temp.	Voltage	Driver
OWL	4	40L	- 835	- UNIV	Non-DIM
OWL OW LED wraparound	**2** 2' length	**30L** 3000 lumens **40L** 4000 lumens	**830** 80 CRI, 3000K **835** 80 CRI, 3500K **840** 80 CRI, 4000K **850** 80 CRI, 5000K	**UNV** Universal voltage 120/277V **347** 347V	Non-dim[4] **DIM** 0-10v dimming driver **SDIM**[3] Step dimming to 40% input power **EMLED**[5] Integral emergency battery pack **GLR** Fusing, fast blow **BAC**[6] Meets the requirements of the Buy American Act of 1933 (BAA)
	4 4' length **8**[1] 8' length	**40L** 4000 lumens **50L**[3] 5000 lumens **70L**[3] 7000 lumens			

Footnotes

1 8' tandem units are double nominal lumens shown. Available in 50L (10,000lm) and 70L (14,000lm) flux packages
2 Nominal total delivered lumens
3 SDIM option not available on 50L and 70L flux options
4 Non-Dim driver option available only on the 2' 3000lm OWL230L.
5 EMLED option not available for 347V 5000lm, 7000lm, 8' 10,000lm and 8' 14,000lm, and 2' models
6 Failure to properly select the "BAC" suffix could result in you receiving product that is not BAA compliant product with no recourse for an RMA or refund. This BAC designation hereunder does not address (i) the applicability of, or availability of a waiver under, the Trade Agreements Act, or (ii) the "Buy America" domestic content requirements imposed on states, localities, and other non-federal entities as a condition of receiving funds administered by the Department of Transportation or other federal agencies.
7 Consult Signify to confirm whether specific accessories are BAA-compliant.

Accessories[7] (order separately)

- **CS-400 –** Rigid Canopy
- **CS-500 –** 42° Top Swivel Canopy
- **CS-12 –** 12" Stem
- **CS-18 –** 18" Stem
- **CS-24 –** 24" Stem
- **CS-30 –** 30" Stem
- **CS-36 –** 36" Stem
- **CS-48 –** 48" Stem
- **MD360 –** 120/277V field installed occupancy sensor
- **MD360-347 –** 347V field installed occupancy sensor

Stems 3/8" Trade Size (5/8" O.D.).
Will Work with 1/2" trade size K.O.'s.
Locknuts included.

Replacement Lenses

- **2'** OWLED824
- **4'** OWLED848
- **8'** OWLED848 (2/fixture)

OWL LED wraparound

2', 4', or 8', 3000, 4000, 5000, or 7000 lumens

Features

- Tapered shape provides appearance of reduced depth.
- Durable 100% frost acrylic lens shields LEDs from direct view.
- Unique 2' 4000lm configuration can displace a 4' 2x28W T5 fluorescent with 50% smaller carbon footprint.
- 8' tandem 10,000lm (50L) and 14,000lm (70L) units ideal for larger applications.
- Long life LEDs provide 50,000 hours (L70)[1] maintenance free system life.
- Ceiling or suspended mounting.
- Snap in LED pan and driver support is tool free for ease of installation.
- Continuous row mountable.
- 5000lm version capable of providing similar light levels to a 2-light 32W T8 strip while using 15% less energy.[2]
- Continuous 0-10v and 100/40 step dimming options available.
- Minimum operating temperature of -20°C.
- Enclosed lens minimizes penetration of dust, insects and other debris into the lamp compartment.
- Fully enclosed wiring and LED diodes.
- 5 year manufacturer's limited warranty.[1,3]

Finish

- Housing and end plates are multi-stage phosphate treated for maximum corrosion resistance and finish coat is high reflectance baked white enamel.

Shielding

- Pattern 12 prismatic acrylic diffuser is specially designed to provide peak performance while minimizing pixilated glare.

Electrical

- LED boards and drivers are RoHS (Restriction of Hazardous Substances) compliant.
- High power factor solid state driver available with non-dimming, 0-10V dimming, and 100/40 step dimming options.
- Total system life rated at 50,000 hours.
- Maximum ambient temperature of 25°C.
- Suitable for cold locations – minimum ambient temperature of -20°C.

Materials

- Heavy gauge cold rolled steel housing, end plates, and LED pan.

Labels

- cETLus listed.
- Suitable for damp locations.
- Many luminaire components, such as reflectors, refractors, lenses, sockets, lampholders, and LEDs are made from various types of plastics which can be adversely affected by airborne contaminants. If sulfur based chemicals, petroleum based products, cleaning solutions, or other contaminants are expected in the intended area of use, consult factory for compatibility.

Footnotes:

1. Based on 25°C ambient operating temperature.
2. OWL450L840 input power is 53W vs a 2-light F32T8 HPF ballast at 277V drawing 62W.
3. Visit www.signify.com/warranties for complete warranty information.

OWL LED wraparound

2', 4', or 8', 3000, 4000, 5000, or 7000 lumens

Dimensions 2'

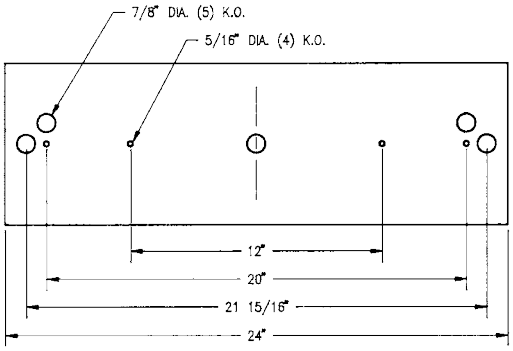

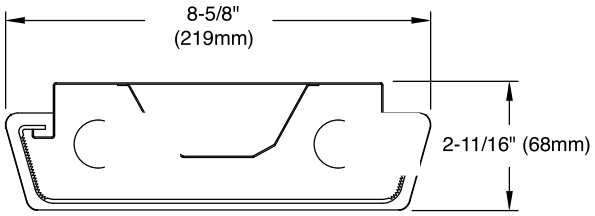

Dimensions 4' & 8'

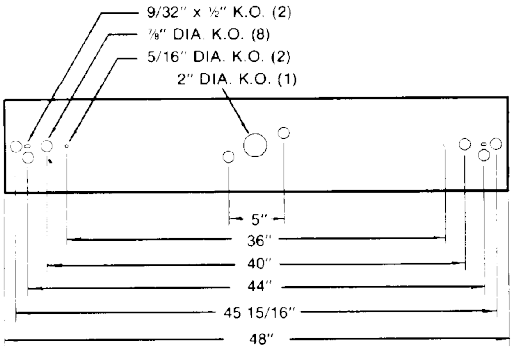

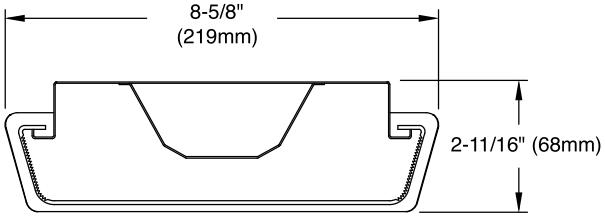

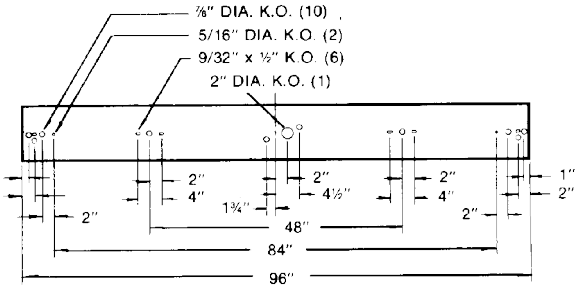

OWL LED wraparound

2', 4', or 8', 3000, 4000, 5000, or 7000 lumens

OWL LED wraparound 2ft, 3000 nominal delivered lumens

Cat No: OWL230L840-UNV

Report no[1]:	32778
Output lumens:	3205 lms
CCT[2]:	4000K
Input watts[3]:	33W
Efficacy:	96 lm/w
Comp Yearly Energy Cost at $0.08/KWh:	$2.50

Candela distribution

Angle	End	45°	Cross	Back-45
0	933	933	933	933
5	926	930	929	930
15	891	900	903	900
25	817	840	850	840
35	707	744	764	744
45	569	627	658	627
55	420	491	536	491
65	275	357	410	357
75	146	235	296	235
85	39	133	201	133
95	1	94	171	94
105	1	90	159	90
115	2	77	128	77
125	2	59	94	59
135	2	40	68	40
145	2	25	46	25
155	3	12	26	12
165	3	4	7	4
175	3	3	3	3

Zonal summary (total efficiency)

Zone	End	45	Cross
45	6283	6251	6494
55	5578	5683	6116
65	4764	5093	5745
75	3808	4566	5605
85	2220	4236	6145

Light Distribution

Degrees	Lumens	% Fixture
0-30	728	22.7
0-40	1191	32.7
0-60	2105	65.7
0-90	2842	88.7
90-120	263	8.2
90-130	311	9.7
90-150	355	11.1
90-180	363	11.3
0-180	3205	100.0

Coefficients of utilization

Ceiling	80%			70%			50%	
Wall	70	50	30	70	50	30	50	30
RC / RW	Zonal cavity method Effective floor reflectance = 20%							
0	115	115	115	112	112	112	105	105
1	105	100	94	101	95	92	90	85
2	94	85	79	91	82	77	78	71
3	85	75	67	82	72	65	68	61
4	79	67	57	76	65	56	60	53
5	71	58	50	69	57	48	54	46
6	67	53	44	64	52	42	48	41
7	61	47	40	59	46	39	44	36
8	57	44	35	55	42	34	40	33
9	54	40	32	52	39	32	36	29
10	50	36	28	48	35	28	34	28

Room Cavity Ratio

OWL LED wraparound 2ft, 4000 delivered lumens

Cat No: OWL240L840-UNV-DIM

Report no[1]:	32616
Output lumens:	4042 lms
CCT[2]:	4000K
Input watts[3]:	47W
Efficacy:	87 lm/w
Comp Yearly Energy Cost at $0.08/KWh:	$2.76

Candela distribution

Angle	End	45°	Cross	Back-45
0	1178	1178	1178	1178
5	1169	1174	1174	1174
15	1124	1136	1138	1136
25	1030	1059	1072	1059
35	893	938	964	938
45	719	790	830	790
55	530	619	678	619
65	347	450	522	450
75	184	298	382	298
85	50	169	263	169
95	1	117	216	117
105	2	111	198	111
115	2	95	160	95
125	2	73	118	73
135	3	48	85	48
145	3	29	57	29
155	4	13	32	13
165	5	5	12	5
175	5	4	12	5

Zonal summary (total efficiency)

Zone	End	45	Cross
45	7932	7879	8200
55	7041	7161	7732
65	6015	6427	7315
75	4802	5778	7227
85	2805	5372	8012

Light Distribution

Degrees	Lumens	% Fixture
0-30	918	22.7
0-40	1502	37.2
0-60	2655	65.7
0-90	3590	88.8
90-120	328	8.1
90-130	387	9.6
90-150	442	10.9
90-180	452	11.2
0-180	4042	100.0

Coefficients of utilization

Ceiling	80%			70%			50%	
Wall	70	50	30	70	50	30	50	30
RC / RW	Zonal cavity method Effective floor reflectance = 20%							
0	115	115	115	112	112	112	105	105
1	105	100	94	101	95	92	90	85
2	94	85	79	91	82	77	78	71
3	85	75	67	82	72	65	68	61
4	79	67	57	7t6	65	56	60	53
5	71	58	50	69	57	48	54	46
6	67	53	44	64	52	42	48	41
7	61	47	40	59	46	39	44	36
8	57	44	35	55	42	34	40	33
9	54	40	32	52	39	32	36	29
10	50	36	28	48	35	28	34	28

Room Cavity Ratio

OWL LED wraparound

2', 4', or 8', 3000, 4000, 5000, or 7000 lumens

OWL LED wraparound 4ft, 4000 nominal delivered lumens

Cat No:
OWL440L840-UNV-DIM

Report no[1]:	32781
Output lumens:	3933lms
CCT[2]:	4000K
Input watts[3]:	37W
Efficacy:	106lm/w
Comp Yearly Energy Cost at $0.08/KWh:	$2.26

Candela distribution

Angle	End	45°	Cross	Back-45
0	1105	1105	1105	1105
5	1096	1101	1103	1101
15	1056	1065	1074	1065
25	973	1001	1015	1001
35	855	900	922	900
45	707	772	804	772
55	542	623	668	623
65	369	465	520	465
75	203	311	373	311
85	57	170	240	170
95	1	111	183	111
105	1	101	169	101
115	2	86	144	86
125	2	64	112	64
135	2	45	85	45
145	3	29	58	29
155	3	16	33	16
165	3	6	12	6
175	4	3	3	3

Zonal summary (total efficiency)

Zone	End	45	Cross
45	4018	3922	3971
55	3745	3690	3812
65	3395	3436	3643
75	2922	3177	3534
85	2003	2956	3669

Light Distribution

Degrees	Lumens	% Fixture
0-30	866	22.0
0-40	1427	36.3
0-60	2567	65.3
0-90	3520	89.5
90-120	294	7.5
90-130	349	8.9
90-150	403	10.2
90-180	413	10.5
0-180	3933	100.0

Coefficients of utilization

Ceiling	80%			70%			50%	
Wall	70	50	30	70	50	30	50	30
RC / RW	Zonal cavity method Effective floor reflectance = 20%							
Room Cavity Ratio 0	116	116	116	112	112	112	105	105
1	105	98	94	101	95	92	90	85
2	94	85	79	91	82	76	78	71
3	85	75	66	82	72	65	68	60
4	79	66	56	75	64	56	59	53
5	71	58	50	68	56	48	54	46
6	66	53	44	64	51	42	47	40
7	61	47	39	58	46	38	44	36
8	56	44	34	55	41	34	40	33
9	53	40	32	51	39	30	36	29
10	50	36	28	47	35	28	34	27

OWL LED wraparound 4ft, 5000 nominal delivered lumens

Cat No:
OWL450L840-UNV-DIM

Report no[1]:	32780
Output lumens:	5136lms
CCT[2]:	4000K
Input watts[3]:	53W
Efficacy:	98lm/w
Comp Yearly Energy Cost at $0.08/KWh:	$2.45

Candela distribution

Angle	End	45°	Cross	Back-45
0	1439	1439	1439	1439
5	1427	1434	1436	1434
15	1375	1391	1399	1391
25	1266	1304	1322	1304
35	1114	1173	1201	1173
45	920	1007	1048	1007
55	704	812	870	812
65	480	608	677	608
75	264	408	487	408
85	74	224	313	224
95	2	146	239	146
105	2	134	221	134
115	2	115	187	115
125	3	85	147	85
135	3	60	110	60
145	4	39	76	39
155	4	21	44	21
165	5	8	16	8
175	5	4	4	4

Zonal summary (total efficiency)

Zone	End	45	Cross
45	5224	5114	5173
55	4868	4814	4963
65	4414	4489	4747
75	3800	4161	4608
85	2628	3892	4776

Light Distribution

Degrees	Lumens	% Fixture
0-30	1128	22.0
0-40	1858	36.2
0-60	3345	65.1
0-90	4591	89.4
90-120	389	7.5
90-130	463	9.0
90-150	535	10.4
90-180	548	10.6
0-180	5136	100.0

Coefficients of utilization

Ceiling	80%			70%			50%	
Wall	70	50	30	70	50	30	50	30
RC / RW	Zonal cavity method Effective floor reflectance = 20%							
Room Cavity Ratio 0	116	116	116	112	112	112	105	105
1	105	98	94	101	95	92	90	85
2	94	85	79	91	82	76	78	71
3	85	75	66	82	72	65	68	60
4	79	66	56	75	64	56	59	53
5	71	58	50	68	56	48	54	46
6	66	53	44	64	51	42	47	40
7	61	47	39	58	46	38	44	36
8	56	44	34	55	41	34	40	33
9	53	40	32	51	39	30	36	29
10	50	36	28	47	35	28	34	27

OWL LED wraparound

2', 4', or 8', 3000, 4000, 5000, or 7000 lumens

OWL LED wraparound 4ft, 7000 nominal delivered lumens

Cat No:
OWL470L840-UNV-DIM

Report no[1]:	32779
Output lumens:	6790lms
	4000K
CCT[2]:	73W
Input watts[3]:	94lm/w
Efficacy:	
Comp Yearly Energy Cost at $0.08/KWh:	$2.55

Candela distribution

Angle	End	45°	Cross	Back-45
0	1905	1905	1905	1905
5	1890	1897	1899	1897
15	1821	1840	1850	1840
25	1680	1726	1750	1726
35	1474	1551	1590	1551
45	1218	1332	1387	1332
55	932	1075	1152	1075
65	635	804	898	804
75	350	538	647	538
85	97	295	418	295
95	2	191	319	191
105	3	175	295	175
115	3	149	250	149
125	4	111	196	111
135	4	78	147	78
145	5	51	101	51
155	6	27	59	27
165	7	10	22	10
175	7	6	6	6

Zonal summary (total efficiency)

Zone	End	45	Cross
45	6914	6765	6849
55	6445	6371	6573
65	5843	5935	6295
75	5032	5493	6125
85	3435	5116	6378

Light Distribution

Degrees	Lumens	% Fixture
0-30	1493	22.0
0-40	2459	36.2
0-60	4425	65.2
0-90	6072	89.4
90-120	509	7.5
90-130	606	8.9
90-150	700	10.3
90-180	718	10.6
0-180	6790	100.0

Coefficients of utilization

Ceiling	80%			70%			50%	
Wall	70	50	30	70	50	30	50	30
RC RW	Zonal cavity method Effective floor reflectance = 20%							
Room Cavity Ratio 0	116	116	116	112	112	112	105	105
1	105	98	94	101	95	92	90	85
2	94	85	79	91	82	76	78	71
3	85	75	66	82	72	65	68	60
4	79	66	56	75	64	56	59	53
5	71	58	50	68	56	48	54	46
6	66	53	44	64	51	42	47	40
7	61	47	39	58	46	38	44	36
8	56	44	34	55	41	34	40	33
9	53	40	32	51	39	30	36	29
10	50	36	28	47	35	28	34	27

Energy Data

Model	Initial Delivered Lumens @ 25°C Ambient	Input Power	Lumens per Watt	Application Notes
OWL230840-UNV	3205	33	96	Low ceilings, mid ambient
OWL240840-UNV-DIM	4042	47	87	2' length, option to 4' fluorescent
OWL440840-UNV-DIM	3933	37	106	Suitable for most general applications
OWL450840-UNV-DIM	5136	53	98	Equal to a 4' 2x32W fluorescent
OWL470840-UNV-DIM	6790	73	94	Better option to a wide 3-light fluorescent wraparound

© 2021 Signify Holding. All rights reserved. The information provided herein is subject to change, without notice. Signify does not give any representation or warranty as to the accuracy or completeness of the information included herein and shall not be liable for any action in reliance thereon. The information presented in this document is not intended as any commercial offer and does not form part of any quotation or contract, unless otherwise agreed by Signify.

Signify North America Corporation
200 Franklin Square Drive,
Somerset, NJ 08873
Telephone 855-486-2216

Signify Canada Ltd.
281 Hillmount Road,
Markham, ON, Canada L6C 2S3
Telephone 800-668-9008

All trademarks are owned by Signify Holding or their respective owners.

Get Freebies with qualifying online purchases. LEARN MORE ›



Representative image only.

ADD TO COMPARE

Cole-Parmer Ducted Island Canopy Fume Hood, 36" W

Cole-Parmer | Item: UX-33731-38

No Reviews Write the First Review

Capture and eliminate contaminated air at the source

- Choose from wall, island, or corner styles ... READ MORE ›

$4,360.00 USD / EACH

Ships by November 25

1 ADD TO CART

+ADD TO LIST

PRODUCT OPTIONS

See All 7 Items in this Product Family

Recommended Accessory

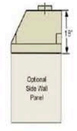

Cole-Parmer Canopy Hood Side Panel, Wall & Ceiling, Fiberglass

$1,365.00 USD / EACH

ADD TO CART